Nidec
All for dreams

User Guide

SI-DeviceNet

Part Number: 0478-0032-03
Issue Number: 3

Original Instructions

For the purposes of compliance with the EU Machinery Directive 2006/42/EC, the English version of this manual is the Original Instructions. Manuals in other languages are Translations of the Original Instructions.

Documentation

Manuals are available to download from the following locations: **http://www.drive-setup.com/ctdownloads**

The information contained in this manual is believed to be correct at the time of printing and does not form part of any contract. The manufacturer reserves the right to change the specification of the product and its performance, and the contents of the manual, without notice.

Warranty and Liability

In no event and under no circumstances shall the manufacturer be liable for damages and failures due to misuse, abuse, improper installation, or abnormal conditions of temperature, dust, or corrosion, or failures due to operation outside the published ratings. The manufacturer is not liable for consequential and incidental damages. Contact the supplier of the drive for full details of the warranty terms.

Environmental policy

Control Techniques Ltd operates an Environmental Management System (EMS) that conforms to the International Standard ISO 14001.

Further information on our Environmental Policy can be found at: **http://www.drive-setup.com/environment**

Restriction of Hazardous Substances (RoHS)

The products covered by this manual comply with European and International regulations on the Restriction of Hazardous Substances including EU directive 2011/65/EU and the Chinese Administrative Measures for Restriction of Hazardous Substances in Electrical and Electronic Products.

Disposal and Recycling (WEEE)

When electronic products reach the end of their useful life, they must not be disposed of along with domestic waste but should be recycled by a specialist recycler of electronic equipment. Control Techniques products are designed to be easily dismantled into their major component parts for efficient recycling. The majority of materials used in the product are suitable for recycling.

Product packaging is of good quality and can be re-used. Large products are packed in wooden crates. Smaller products are packaged in strong cardboard cartons which have a high recycled fibre content. Cartons can be re-used and recycled. Polythene, used in protective film and bags for wrapping the product, can be recycled. When preparing to recycle or dispose of any product or packaging, please observe local legislation and best practice.

REACH legislation

EC Regulation 1907/2006 on the Registration, Evaluation, Authorisation and restriction of Chemicals (REACH) requires the supplier of an article to inform the recipient if it contains more than a specified proportion of any substance which is considered by the European Chemicals Agency (ECHA) to be a Substance of Very High Concern (SVHC) and is therefore listed by them as a candidate for compulsory authorisation.

Further information on our compliance with REACH can be found at: **http://www.drive-setup.com/reach**

Registered Office

Nidec Control Techniques Ltd
The Gro
Newtown
Powys
SY16 3BE
UK
Registered in England and Wales. Company Reg. No. 01236886.

Copyright

The contents of this publication are believed to be correct at the time of printing. In the interests of a commitment to a policy of continuous development and improvement, the manufacturer reserves the right to change the specification of the product or its performance, or the contents of the guide, without notice.

All rights reserved. No parts of this guide may be reproduced or transmitted in any form or by any means, electrical or mechanical including photocopying, recording or by an information storage or retrieval system, without permission in writing from the publisher.

Copyright © January 2018 Nidec Control Techniques Ltd

Contents

1 Safety information 6
1.1 Warnings, Cautions and Notes 6
1.2 Important safety information. Hazards. Competence of designers and installers 6
1.3 Responsibility 6
1.4 Compliance with regulations 6
1.5 Electrical hazards 7
1.6 Stored electrical charge 7
1.7 Mechanical hazards 7
1.8 Access to equipment 7
1.9 Environmental limits 8
1.10 Hazardous environments 8
1.11 Motor 8
1.12 Mechanical brake control 8
1.13 Adjusting parameters 8
1.14 Electromagnetic compatibility (EMC) 8

2 Introduction 9
2.1 What Is DeviceNet? 9
2.2 What is SI-DeviceNet? 11
2.3 General specification 11
2.4 Back-up power supply 11
2.5 Option Module identification 12
2.6 Product Conformance Certificate 12
2.7 Software Statement 12
2.8 Conventions used in this guide 13

3 Mechanical installation 14
3.1 General installation 14

4 Electrical installation 17
4.1 SI-DeviceNet terminal descriptions 17
4.2 SI-DeviceNet connections 18
4.3 DeviceNet cable 18
4.4 DeviceNet network termination 19
4.5 SI-DeviceNet cable shield connections 19
4.6 DeviceNet ground point 20
4.7 Maximum network length 20
4.8 Spurs 20
4.9 Minimum node to node cable length 20

5 Getting started 21
5.1 Parameter save and restore 23
5.2 Module reset 23
5.3 Restoring module parameter default values 23
5.4 Single Line Parameters 23

6 Parameters 30
6.1 Menus 30
6.2 Module menu 0 - Module Information 30
6.3 Module menu 1 - DeviceNet Setup 33
6.4 Module menu 2 - Input Mappings 45
6.5 Module menu 3 - Output Mappings 46
6.6 Module menu 4 - Fault Values 47

7 Non cyclic data 49
7.1 Introduction 49
7.2 Explicit parameter access 49

8 Control / status word 50
8.1 What are control and status words? 50
8.2 Control word 50
8.3 Status word 52

9 EDS Files 54
9.1 What are EDS files? 54
9.2 Generic EDS files 54

10 Advanced Features 55
10.1 Supported Drive assembly objects 55

11 DeviceNet Objects 59
11.1 Identity Object 59
11.2 SI-DeviceNet Object 62
11.3 Motor Data Object 63
11.4 Control Supervisor 65
11.5 AC/DC Drive Object 68
11.6 Control Techniques Object 71

12 Diagnostics 72
12.1 Overview 72

13 Glossary Of Terms 76

1 Safety information

1.1 Warnings, Cautions and Notes

WARNING

A **Warning** contains information, which is essential for avoiding a safety hazard.

CAUTION

A **Caution** contains information, which is necessary for avoiding a risk of damage to the product or other equipment.

NOTE

A **Note** contains information which helps to ensure correct operation of the product.

1.2 Important safety information. Hazards. Competence of designers and installers

This guide applies to products which control electric motors either directly (drives) or indirectly (controllers, option modules and other auxiliary equipment and accessories). In all cases the hazards associated with powerful electrical drives are present, and all safety information relating to drives and associated equipment must be observed.

Specific warnings are given at the relevant places in this guide.

Drives and controllers are intended as components for professional incorporation into complete systems. If installed incorrectly they may present a safety hazard. The drive uses high voltages and currents, carries a high level of stored electrical energy, and is used to control equipment which can cause injury. Close attention is required to the electrical installation and the system design to avoid hazards either in normal operation or in the event of equipment malfunction. System design, installation, commissioning/ start-up and maintenance must be carried out by personnel who have the necessary training and competence. They must read this safety information and this guide carefully.

1.3 Responsibility

It is the responsibility of the installer to ensure that the equipment is installed correctly with regard to all instructions given in this guide. They must give due consideration to the safety of the complete system, so as to avoid the risk of injury both in normal operation and in the event of a fault or of reasonably foreseeable misuse.

The manufacturer accepts no liability for any consequences resulting from inappropriate, negligent or incorrect installation of the equipment.

1.4 Compliance with regulations

The installer is responsible for complying with all relevant regulations, such as national wiring regulations, accident prevention regulations and electromagnetic compatibility (EMC) regulations. Particular attention must be given to the cross-sectional areas of conductors, the selection of fuses or other protection, and protective ground (earth) connections.

This guide contains instructions for achieving compliance with specific EMC standards.

All machinery to be supplied within the European Union in which this product is used must comply with the following directives:

2006/42/EC Safety of machinery.

2014/30/EU: Electromagnetic Compatibility.

1.5 Electrical hazards

The voltages used in the drive can cause severe electrical shock and/or burns, and could be lethal. Extreme care is necessary at all times when working with or adjacent to the drive. Hazardous voltage may be present in any of the following locations:

- AC and DC supply cables and connections
- Output cables and connections
- Many internal parts of the drive, and external option units

Unless otherwise indicated, control terminals are single insulated and must not be touched.

The supply must be disconnected by an approved electrical isolation device before gaining access to the electrical connections.

The STOP and Safe Torque Off functions of the drive do not isolate dangerous voltages from the output of the drive or from any external option unit.

The drive must be installed in accordance with the instructions given in this guide. Failure to observe the instructions could result in a fire hazard.

1.6 Stored electrical charge

The drive contains capacitors that remain charged to a potentially lethal voltage after the AC supply has been disconnected. If the drive has been energized, the AC supply must be isolated at least ten minutes before work may continue.

1.7 Mechanical hazards

Careful consideration must be given to the functions of the drive or controller which might result in a hazard, either through their intended behaviour or through incorrect operation due to a fault. In any application where a malfunction of the drive or its control system could lead to or allow damage, loss or injury, a risk analysis must be carried out, and where necessary, further measures taken to reduce the risk - for example, an over-speed protection device in case of failure of the speed control, or a fail-safe mechanical brake in case of loss of motor braking.

With the sole exception of the Safe Torque Off function, none of the drive functions must be used to ensure safety of personnel, i.e. they must not be used for safety-related functions.

The Safe Torque Off function may be used in a safety-related application. The system designer is responsible for ensuring that the complete system is safe and designed correctly according to the relevant safety standards.

The design of safety-related control systems must only be done by personnel with the required training and experience. The Safe Torque Off function will only ensure the safety of a machine if it is correctly incorporated into a complete safety system. The system must be subject to a risk assessment to confirm that the residual risk of an unsafe event is at an acceptable level for the application.

1.8 Access to equipment

Access must be restricted to authorized personnel only. Safety regulations which apply at the place of use must be complied with.

1.9 Environmental limits

Instructions in this guide regarding transport, storage, installation and use of the equipment must be complied with, including the specified environmental limits. This includes temperature, humidity, contamination, shock and vibration. Drives must not be subjected to excessive physical force.

1.10 Hazardous environments

The equipment must not be installed in a hazardous environment (i.e. a potentially explosive environment).

1.11 Motor

The safety of the motor under variable speed conditions must be ensured.

To avoid the risk of physical injury, do not exceed the maximum specified speed of the motor.

Low speeds may cause the motor to overheat because the cooling fan becomes less effective, causing a fire hazard. The motor should be installed with a protection thermistor. If necessary, an electric forced vent fan should be used.

The values of the motor parameters set in the drive affect the protection of the motor. The default values in the drive must not be relied upon. It is essential that the correct value is entered in the Motor Rated Current parameter.

1.12 Mechanical brake control

Any brake control functions are provided to allow well co-ordinated operation of an external brake with the drive. While both hardware and software are designed to high standards of quality and robustness, they are not intended for use as safety functions, i.e. where a fault or failure would result in a risk of injury. In any application where the incorrect operation of the brake release mechanism could result in injury, independent protection devices of proven integrity must also be incorporated.

1.13 Adjusting parameters

Some parameters have a profound effect on the operation of the drive. They must not be altered without careful consideration of the impact on the controlled system. Measures must be taken to prevent unwanted changes due to error or tampering.

1.14 Electromagnetic compatibility (EMC)

Installation instructions for a range of EMC environments are provided in the relevant Power Installation Guide. If the installation is poorly designed or other equipment does not comply with suitable standards for EMC, the product might cause or suffer from disturbance due to electromagnetic interaction with other equipment. It is the responsibility of the installer to ensure that the equipment or system into which the product is incorporated complies with the relevant EMC legislation in the place of use.

2 Introduction

2.1 What Is DeviceNet?

DeviceNet is a networking system that falls into the generic category of Fieldbus. Fieldbuses are generally defined as industrial networking systems that are intended to replace traditional wiring systems. Figure 2-1 shows the traditional cabling requirements to transfer signals between a controller and two nodes.

Figure 2-1 SI-DeviceNet Traditional cable layout

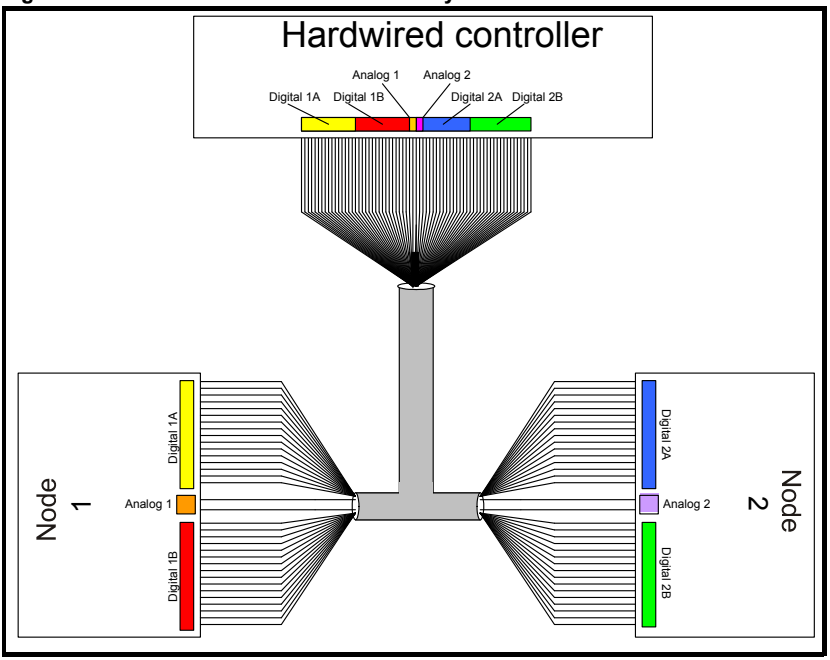

Table 2-1 details how the wiring is used to communicate data between the controller and the nodes. Each signal that is communicated requires one signal wire giving a total of 66 signal wires plus a 0V return.

Table 2-1 Traditional wiring details

Number of signals	Type	Source / Destination	Description
16	digital inputs	node 1 to master	status signals
	digital outputs	controller to slave 1	control signals
1	analog output	controller to slave 1	control signal
16	digital inputs	node 2 to master	status signals
	digital outputs	controller to slave 2	control signals
1	analog output	controller to slave 2	control signal

A fieldbus topology such as DeviceNet allows the same configuration to be realised using only 2 signal wires plus a shield and power. This method of communication saves significantly on the amount of cabling required and can improve overall system reliability, as the number of inter-connections is greatly reduced.

Figure 2-2 shows a typical DeviceNet system transferring the same signals as given in the traditionally wired example. The signals are now transmitted by converting them into a serial data stream which is received by the master as if they were connected using traditional wiring. The data stream on DeviceNet allows up to 56 (*28 input and 28 output*) independent values to be sent or received by the master, there are also methods available (non-cyclic data) to allow random access to drive parameters.

Figure 2-2 DeviceNet overview

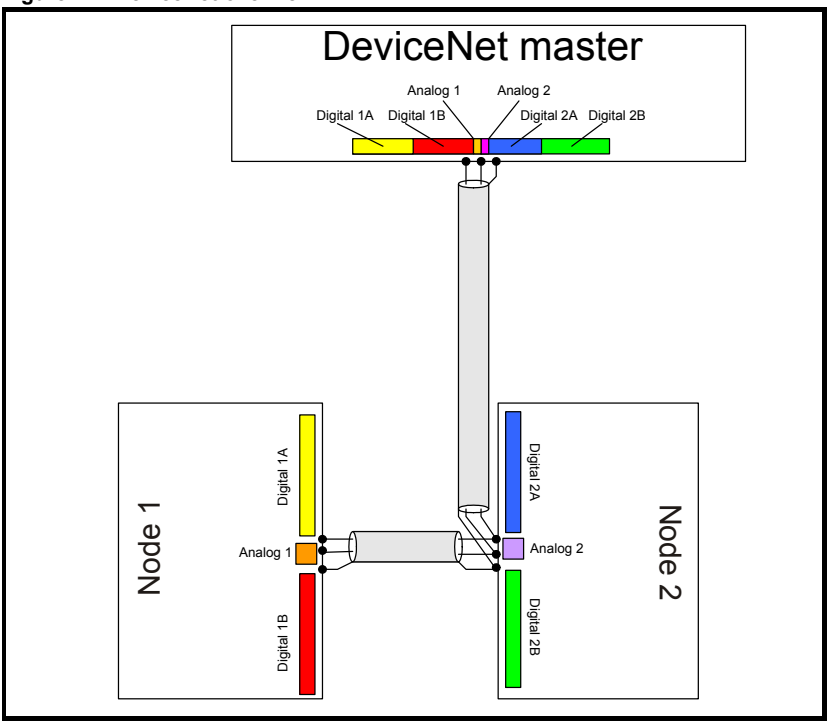

Table 2-2 Data mappings for SI-DeviceNet

Number of network words	Type	Source / Destination	Description
1	digital inputs	slave 1 to master	status signals
	digital outputs	master to slave 1	control signals
	analog output	master to slave 1	control signal
	digital inputs	slave 2 to master	status signals
	digital outputs	master to slave 2	control signals
	analog output	master to slave 2	control signal

Table 2-2 details the number of data words used to communicate the signals using the DeviceNet network. It can be seen that the resulting reduction in cabling is significant. DeviceNet can transfer data using two distinct modes. The first of these modes is cyclic where signals are sent in predefined blocks at regular intervals. This is the equivalent of the hard-wired example above in Figure 2-1.

The second method of transfer is called non-cyclic data and is used for sending values that only need to be changed occasionally or where the source or destination of the signal changes; this is the equivalent of a temporary patch lead that is removed after use.

2.2 What is SI-DeviceNet?

SI-DeviceNet is a Fieldbus Option Module which can be installed to the expansion slot(s) in Unidrive M to provide DeviceNet slave connectivity.

It is possible to use more than one SI-DeviceNet or a combination of SI-DeviceNet and other Option Modules to provide additional functionality such as extended I/O, gateway functionality, or additional PLC features.

Figure 2-3 SI-DeviceNet Option Module

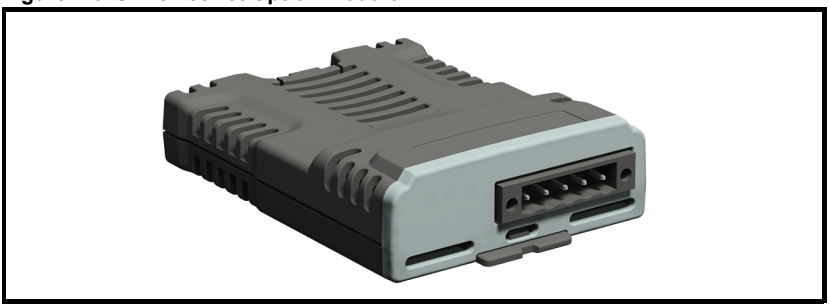

2.3 General specification

- Supported data rates (bits per s): 500 k, 250 k, 125 k.
- 1 to 28 input/output polled data words supported.
- Explicit communications (non-cyclic) provides access to all drive parameters.
- 8 pre-defined DeviceNet profiles supported.

2.4 Back-up power supply

The required drive can be connected to a back-up power supply. This keeps the control electronics and Option Module powered up, allowing the SI-DeviceNet to continue communicating with the DeviceNet master controller when the line power to the drive is switched off.

NOTE The back-up supply is provided through the drive and not the connections on SI-DeviceNet, which have an alternative use.

2.5 Option Module identification

SI-DeviceNet can be identified by:

1. The label located on the top of the Option Module.
2. The color coding across the front of the SI-DeviceNet (dark grey).

Figure 2-4 SI-DeviceNet labels

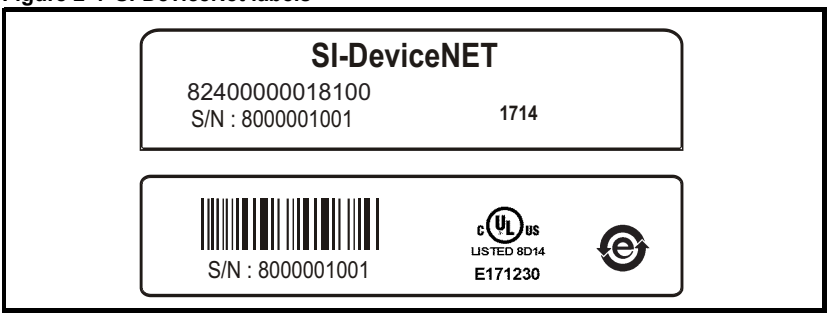

2.5.1 Date code format

The date code is four numbers. The first two numbers indicate the year and the remaining numbers indicate the week of the year in which the drive was built.

Example:

A date code of 1710 would correspond to week 10 of year 2017.

2.6 Product Conformance Certificate

SI-DeviceNet has been awarded full DeviceNet Conformance Certification by the Open DeviceNet Vendors Association (ODVA). A copy of the certificate is available on request from your supplier or local Control Techniques Drive Centre.

2.7 Software Statement

This Option module is supplied with the latest software version. When retro-fitting to an existing system, all software versions should be verified to confirm the same functionality as Option modules of the same type already present. This also applies to products returned from a Control Techniques Service Centre or Repair Centre. If there is any doubt please contact the supplier of the product.

The software version of the Option module can be identified by looking at Pr **MM.002** where MM is the relevant menu number for the Option module slot being used. See Pr **MM.002** description later in this manual for more information. The software version takes the form of **ww.xx.yy.zz** seen in **MM.002**.

2.8 Conventions used in this guide

The configuration of the host drive and Option Module is done using menus and parameters. A menu is a logical collection of parameters that have similar functionality. In the case of an Options Module, the parameters will appear in menu 15, 16 or 17 depending on which slot the module is installed to. The menu is determined by the number before the decimal point.

The method used to determine the menu or parameter is as follows:

- Pr **S.mm.ppp** - Where S signifies the Option module slot number and mm.ppp signifies the menu and parameter number of the Option module's internal menus and parameters.
- Pr **MM.ppp** - Where MM signifies the menu allocated to the Option module set-up menu and ppp signifies the parameter number.
- Pr **mm.000** - Signifies parameter number 000 in any drive menu.

3 Mechanical installation

Before installing or removing an option module from any drive, ensure the AC supply has been disconnected for at least 10 minutes and refer to Chapter 1 *Safety information* on page 6. If using a DC bus supply ensure this is fully discharged before working on any drive or option module.

3.1 General installation

The installation of an option module is illustrated in Figure 3-1.

Installation of the various option modules is illustrated in the following diagrams.

Figure 3-1 Installation of an SI option module on Unidrive M200 to M400 (sizes 2 to 4)

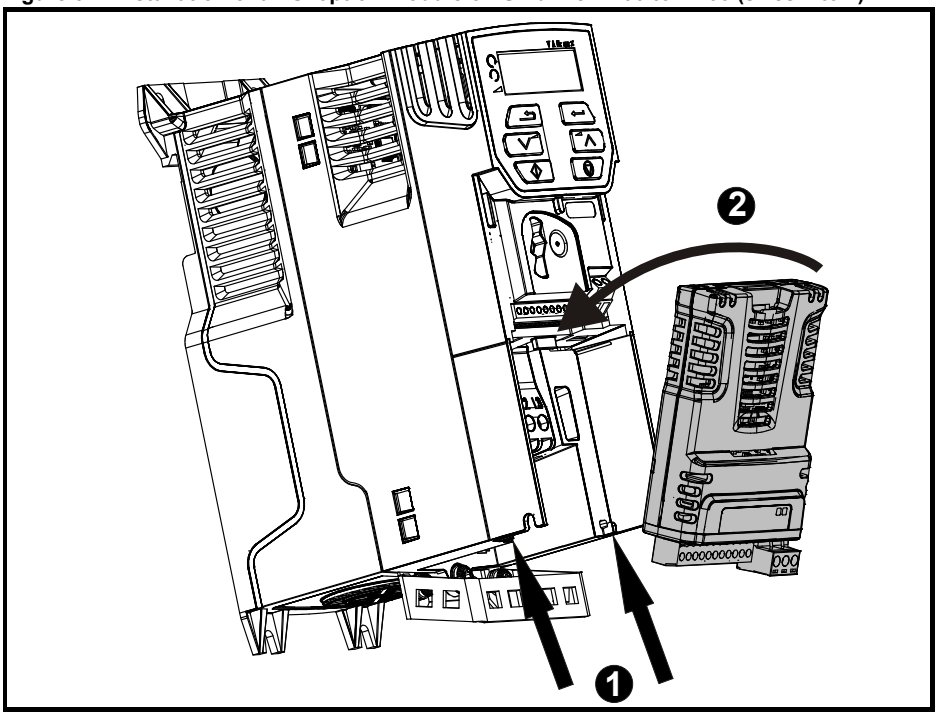

- With the option module tilted slightly backwards, align and locate the two holes in the rear of the option module onto the two tabs (1) on the drive.
- Place the option module onto the drive as shown in (2) until the module clicks into place. The terminal cover on the drive holds the option module in place, so this must now be replaced.

NOTE

The above diagram is for illustration only, the actual option module may be different to the one shown here.

NOTE

Option modules can only be installed on drives that have the option module slot functionality.

Figure 3-2 Installation of an SI option module on Unidrive M200 to M400 (sizes 5 to 9)

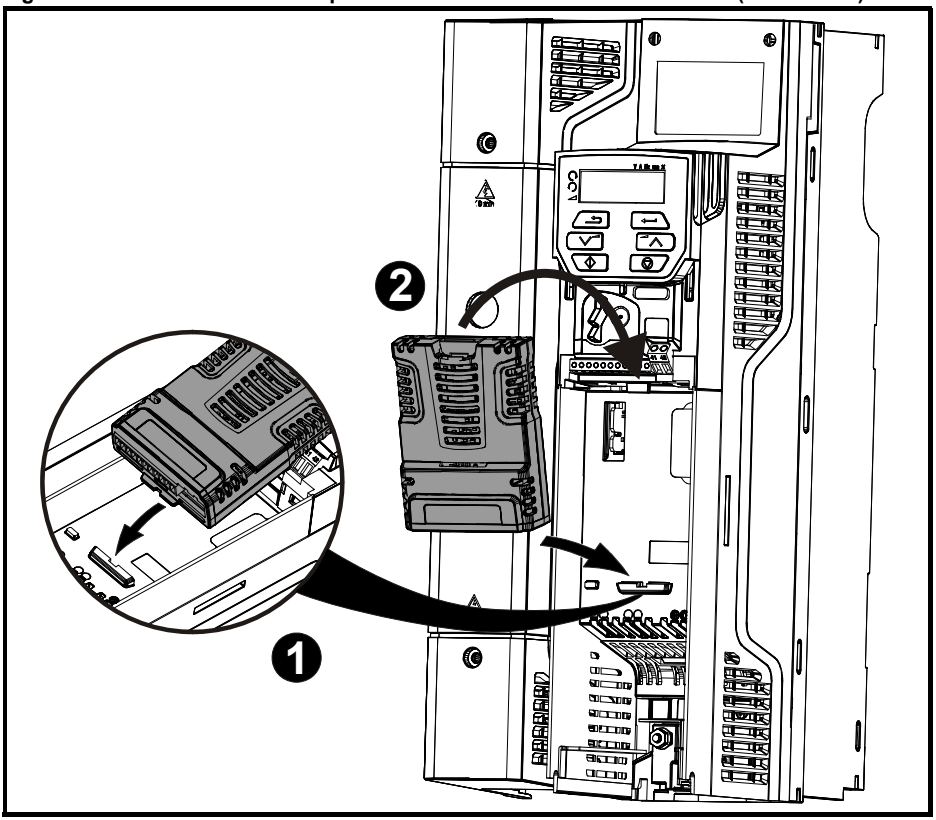

- Place the option module onto the drive as shown in (2) until the module clicks into place. The terminal cover on the drive holds the option module in place, so this must now be replaced.

Figure 3-3 Installation of an SI option module on Unidrive M600 to M702

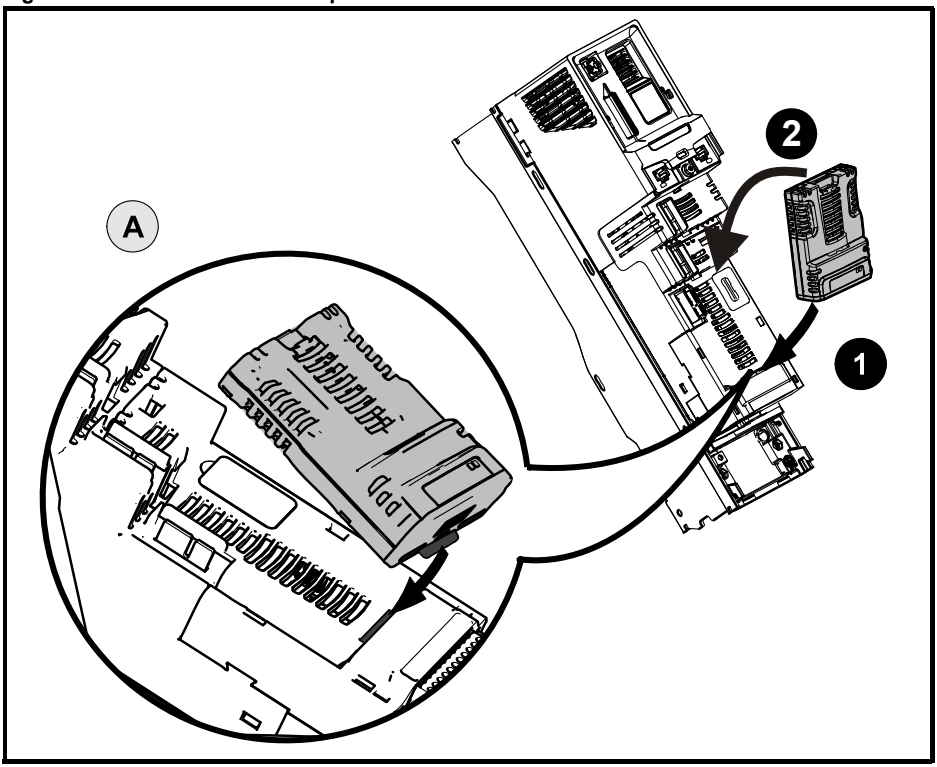

NOTE

Option module slots must be used in the following order: (Slot 3), (Slot 2) then (Slot 1).

- Move the option module in the direction shown (1/2).
- Align and insert the option module tab into the slot provided. This is highlighted in the detailed view (A).
- Press down on the option module until it clicks into place.

4 Electrical installation

4.1 SI-DeviceNet terminal descriptions

SI-DeviceNet has a standard 5-way screw terminal block connector (shown on the right) for the DeviceNet network.

Figure 4-1 SI-DeviceNet - connector view

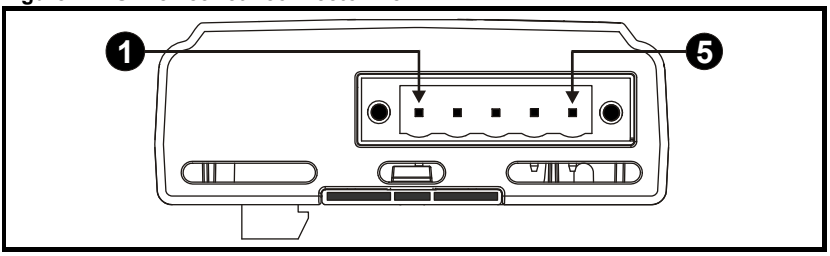

Table 4-1 SI-DeviceNet terminal descriptions

5-way terminal	Function	Description
1	0 V	0 V DeviceNet external supply
2	CAN-L	Negative data line
3	Shield	Cable braided shield connection
4	CAN-H	Positive data line
5	+24 V	+24 V DeviceNet external supply

NOTE The external supply terminals provide power for the DeviceNet transceiver circuitry, but do NOT provide power to keep the SI-DeviceNet operating in the event of the mains power supply loss to the drive. An external supply will keep the DeviceNet transceivers powered up and the network load characteristics constant in the event of loss of power to the drive.

CAUTION Any external supply must be suitably installed to prevent noise on the network. Connecting pins 1 and 5 to an external supply allows the line driver circuitry to remain powered when the drive and the SI-DeviceNet module are turned off. This 24 V input does not allow SI-DeviceNet to continue communicating.

4.2 SI-DeviceNet connections

To connect SI-DeviceNet to the DeviceNet network, make the connections as shown in the diagram below. The length of the "pigtail" shield connection must be kept as short as possible.

Figure 4-2 SI-DeviceNet connections

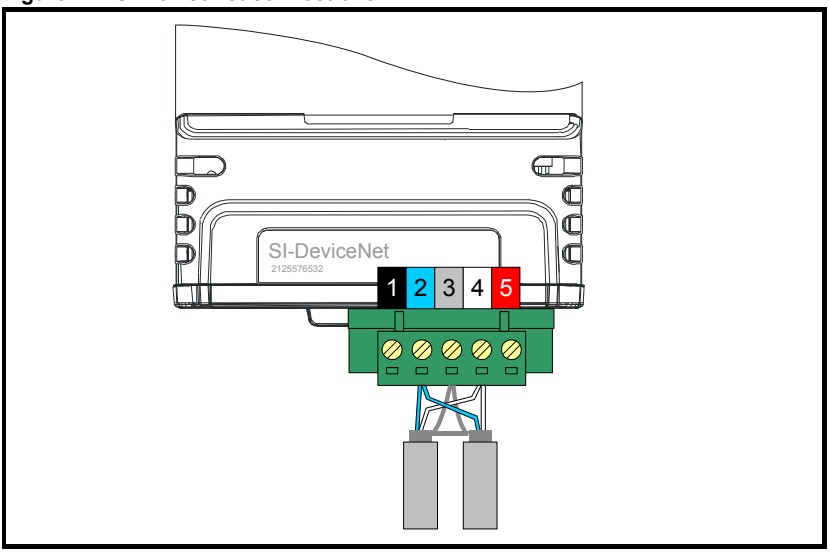

4.3 DeviceNet cable

DeviceNet cable has 2 twisted pairs plus an overall shielding. DeviceNet has a specified color code, and it is important that this code is maintained. The data wires are white and blue, and the network power supply wires are red and black.

Table 4-2 DeviceNet cable color codes

Terminal	Cable	Data signal	Description
1	Black	0V	0 V external power supply
2	Blue	CAN-L	Negative data line
3	Braided Shield	Shield	Cable shield
4	White	CAN-H	Positive data line
5	Red	+24 V	+24 V external power supply

DeviceNet networks run at high data rates and require cable specifically designed to carry high frequency signals. Low quality cable will attenuate the signals and may render the signal unreadable for the other nodes on the network. Cable specifications and a list of approved manufacturers of cable for use on DeviceNet networks is available on the Open DeviceNet Vendors Association web site at *www.odva.org*.

NOTE Control Techniques can only guarantee correct and reliable operation of SI-DeviceNet if all other equipment installed on the DeviceNet network (including the network cable) has been approved by the ODVA.

4.4 DeviceNet network termination

It is very important in high-speed communications networks that the network communications cable is installed with the specified termination resistor network at each end of the cable segment. This prevents signals from being reflected back down the cable and causing interference.

During installation of a DeviceNet network, 120 Ω 0.25 W termination resistors should be installed across the CAN-H and CAN-L lines at both ends of the network segment, as shown in Figure 4-3 below.

Figure 4-3 DeviceNet network termination

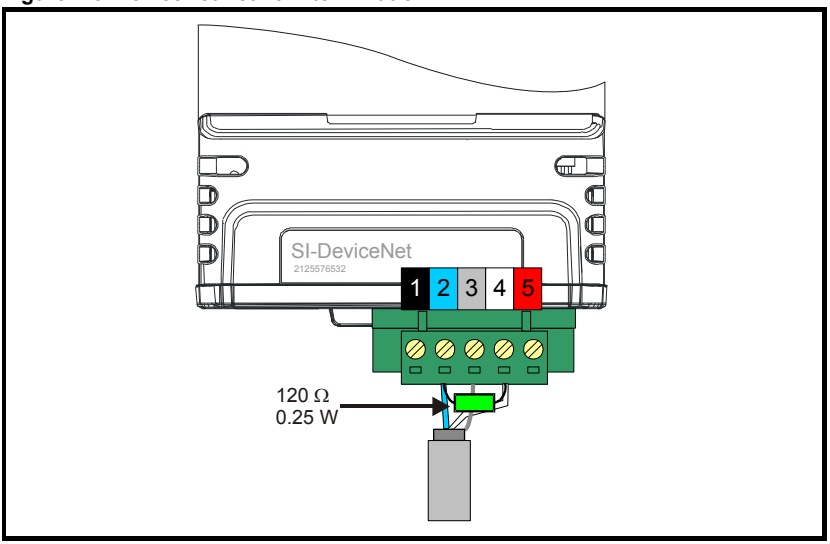

NOTE Failure to terminate a network correctly can seriously affect the operation of the network. If the correct termination resistors are not installed, the noise immunity of the network is greatly reduced.

If too many termination resistors are installed on a DeviceNet network, the network will be over-loaded, resulting in reduced signal levels. This may cause nodes to miss some bits of information, resulting in potential transmission errors.

4.5 SI-DeviceNet cable shield connections

The SI-DeviceNet should be wired with the cable shields isolated from ground at each drive. The cable shields should be linked together at the point where they emerge from the cable, and formed into a short pigtail to be connected to pin 3 on the DeviceNet connector.

NOTE The DeviceNet cable can be tie-wrapped to the grounding bar or local convenient mounting that is not live to provide strain relief, but the DeviceNet cable shield must be kept isolated from ground at each node. The only exception to this is the DeviceNet ground point. Refer to section 4.6 *DeviceNet ground point* on page 20.

4.6 DeviceNet ground point

The DeviceNet cable shield must be grounded AT ONE POINT only, usually near the centre point of the cable run. This is to prevent the cable shield from becoming live in the event of catastrophic failure of another device on the DeviceNet network.

4.7 Maximum network length

The maximum number of nodes that can be connected to a single DeviceNet network segment is 64. The maximum length of network cable for a DeviceNet network is specified by the *Open DeviceNet Vendors Association* and depends on the data rate to be used.

Table 4-3 DeviceNet maximum segment lengths

Data rate (bits/sec)	Maximum network length (m)
1 M	30
800 k	50
500 k	100
250 k	250
125 k	500
100 k	700
50 k	1000
20 k	2500
10 k	5000

4.8 Spurs

Control Techniques do not recommend the use of spurs on a DeviceNet network.

4.9 Minimum node to node cable length

The DeviceNet specification does not specify a minimum node to node distance, however, Control Techniques advises a minimum distance of 1 m between nodes to prevent excessive bend radii and to reduce network reflections.

5 Getting started

This section is intended to provide a generic guide for setting up SI-DeviceNet and a master controller/PLC. Figure 5-1 *Quick start chart SI-DeviceNet* on page 22 is intended as the starting point for a new installation. The following pages detail the various methods available to configure SI-DeviceNet. It is recommended that all of this section is read, before attempting to configure a system.

NOTE It is recommended that the latest firmware is used where possible to ensure all features are supported.

NOTE Due to the large number of different PLCs/masters that support DeviceNet, details cannot be provided for any specific master or PLC. Generic support is available through your supplier or local drive centre. Before contacting your supplier or local drive centre for support ensure you have read Chapter 12 *Diagnostics* on page 72 of this manual and check you have configured all parameters correctly.

Ensure the following information is available before calling:

- A list of all parameters in SI-DeviceNet
- The drive firmware version (*see the drive documentation*)
- The SI-DeviceNet firmware version

Figure 5-1 Quick start chart SI-DeviceNet

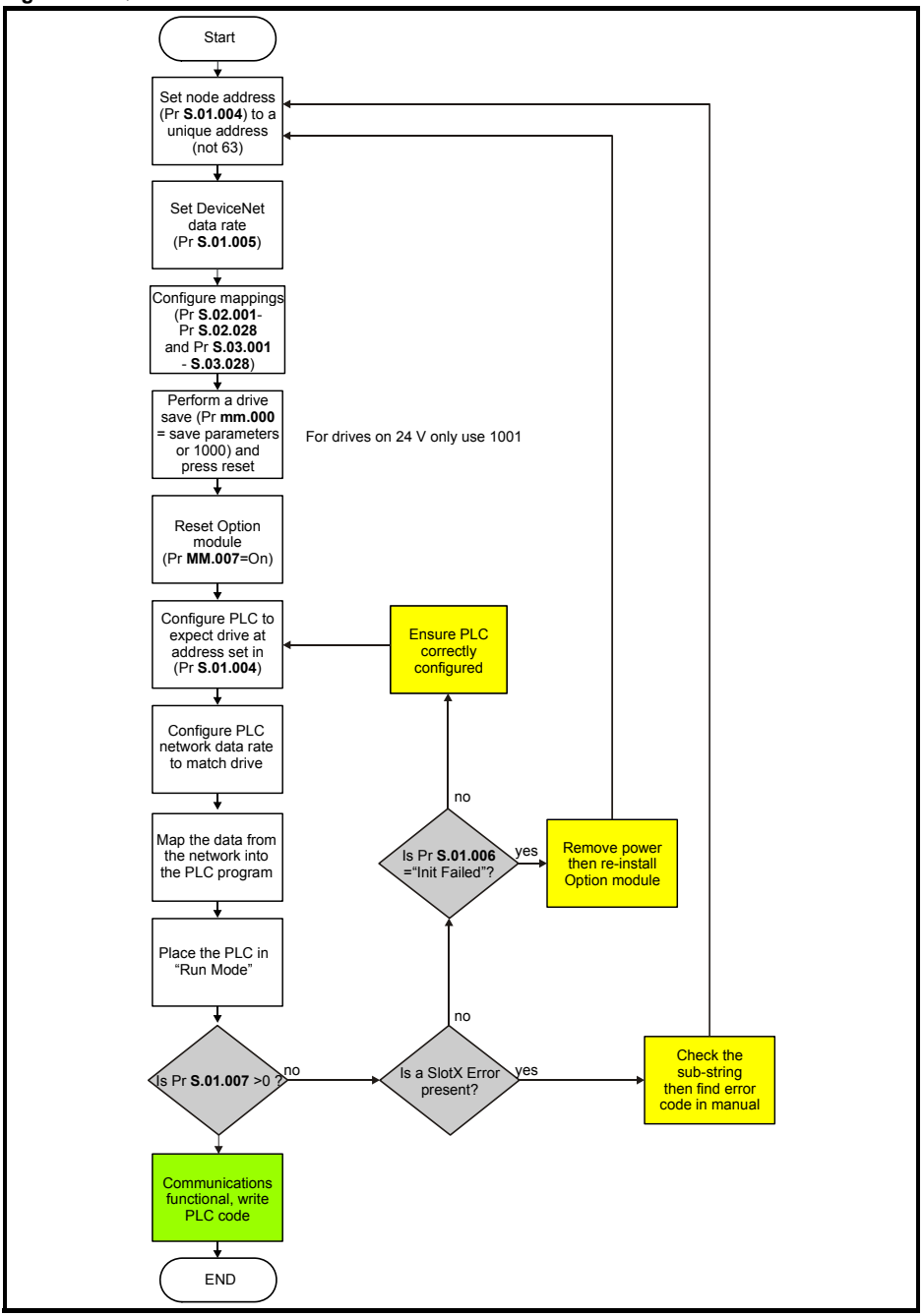

5.1 Parameter save and restore

Parameters in the module are saved when a normal drive parameter save is initiated by selecting "Save Parameters" or setting a value of 1000 in Pr **mm.000** and performing a drive reset. (If the drive is in the under voltage state or is supplied from a low voltage power supply then a value of 1001 must be set in Pr **mm.000** and a drive reset performed).

Any user-saved parameters in the option module's internal menus are stored in non-volatile memory on the module and not in the drive. Therefore, if the module is moved to a different slot or to a different drive, then any saved parameter values will follow the module. If a module is to be replaced, ensure that the parameter values for the module have been backed up before replacing it.

5.2 Module reset

A reset of the SI-DeviceNet module can be performed by the methods detailed below.

- Set Pr **S.00.007** (or **Pr MM.007**) to On (1). This will only reset the module in slot S.
- Select "Reset modules" or set a value of 1070 in Pr **mm.000**, and performing a drive reset. This will perform a reset of all option modules installed in the drive.

5.3 Restoring module parameter default values

Setting Pr **S.00.008** (or Pr **MM.008**) to On (1) and performing a module reset will return all parameters in the SI-DeviceNet module to their default values.

Parameters in the SI-DeviceNet module will also be set to their default values when drive parameters are returned to their default values.

5.4 Single Line Parameters

Table 5-1 Menu 0 Setup

Parameter		Range(⇕)	Default(⇨)	Type					
MM.001	Module ID	0 to 999	447	RO	Num	ND	NC	PT	
MM.002	Software Version	00.00.00.00 to 99.99.99.99		RO	Num	ND	NC	PT	
MM.003	Hardware Version	00.00 to 99.99		RO	Num	ND	NC	PT	
MM.004	Serial Number LS	0 to 99999999		RO	Num	ND	NC	PT	
MM.005	Serial Number MS	0 to 99999999		RO	Num	ND	NC	PT	
MM.006	Module status	Initialising (0), OK (1), Config (2), Error (3)		RO	Num	ND	NC	PT	
MM.007	Module reset	Off (0) or On (1)	Off (0)	RW	Bit		NC		
MM.008	Module default	Off (0) or On (1)	Off (0)	RW	Bit		NC		

Table 5-2 Menu 1 DeviceNet setup

Parameter		Range(⇕)	Default(⇨)	Type					
S.01.001	Enable DeviceNet Interface	Off (0) or On (1)	On (1)	RO	Bit		NC		
S.01.002	Reset DeviceNet Interface	Off (0) or On (1)	Off (0)	RW	Bit		NC		
S.01.003	Default DeviceNet Interface	Off (0) or On (1)	Off (0)	RW	Bit		NC		
S.01.004	DeviceNet node address	0 to 63	63	RW	Num				US
S.01.005	Baud rate	Auto Detect (-1), 125 kbps (0), 250 kbps (1), 500 kbps (2)	125 kbps (0)	RW	Txt				US
S.01.006	DeviceNet Network Diagnostic	Network OK (0), Init OK (1), No Cyclic (2), Init Failed (3), Comm Fault (4), No 24 V (5), Baud detecting (6), Initialising (7)		RO	Txt	ND	NC	PT	
S.01.007	Cyclic data transfers per second	0 to 9999 messages/s		RO	Num	ND	NC	PT	
S.01.010	Timeout delay	0 to 9999 ms	200 ms	RW	Num				US
S.01.011	Timeout action	Trip (0), Send flt values (1), Clear output (2), Hold last (3), No action (4)	Trip (0)	RW	Txt				US
S.01.012	Timeout event destination	This slot (0), Slot 1 (1), Slot 2 (2), Slot 3 (3), Slot 4 (4)	This slot (0)	RW	Txt				US
S.01.013	Timeout event	No event (0), Event 0 (1), Event 1 (2), Event 2 (3), Event 3 (4), Event 4 (5)	No event (0)	RW	Txt				US
S.01.014	Data alignment	32 (0) or 16 (1) bits	32 (0) bits	RW	Txt				US
S.01.018	Input Cyclic Assembly Object ID	70-73, 106-160 (even)	112	RW	Num				US
S.01.019	Output Cyclic Assembly Object ID	20-23, 107-161 (odd)	113	RW	Num				US
S.01.020	Input cyclic mapping length	1 to 28	4	RO	Num				
S.01.021	Output cyclic mapping length	1 to 28	4	RO	Num				
S.01.022	Input mapping status	No error (0), Par Impossible (1), Hole in mapping (2), Dup mapping (3), Length exceed (4), Obj not support (5), Pre & uncompress (6), Type Unmatched (7), Memory fault (8), No mapping (9)	No error (0)	RO	Txt		NC	PT	
S.01.023	Output mapping status	No error (0), Par Impossible (1), Hole in mapping (2), Dup mapping (3), Length exceed (4), Obj not support (5), Pre & uncompress (6), Type Unmatched (7), Memory fault (8), No mapping (9)	No error (0)	RO	Txt		NC	PT	
S.01.024	Input processing time	0 to 65535 ms		RO	Num	ND			
S.01.025	Output processing time	0 to 65535 ms		RO	Num	ND			
S.01.026	Input consistency enable	Disable (0) or Enable (1)	Disable (0)	RW	Bit				US
S.01.027	Input consistency trigger parameter	0 to 4.99.999	0.00.000	RW	DE			PT	US

Parameter		Range(⇕)	Default(⇨)	Type					
S.01.028	Output consistency enable	Disable (0) or Enable (1)	Disable (0)	RW	Bit				US
S.01.029	Output consistency trigger parameter	0 to 4.99.999	0.00.000	RW	DE			PT	US
S.01.031	Custom product type	Unidrive M (0) or Unidrive SP (1)	Unidrive M (0)	RW	Txt				US
S.01.032	Custom product version	0 to 9999	0	RW	Num				US
S.01.034	Bus Off trip	Enable (0) or Disable (1)	Enable (0)	RW	Txt				US
S.01.040	Motor 1 Type	FC DC Motor (2), WRI motor (6), SCI motor (7), Sin PM BL motor (9), Trap PM BL motor (10)	SCI motor (7)	RO	Txt			PT	US
S.01.041	Motor 2 Type	FC DC Motor (2), WRI motor (6), SCI motor (7), Sin PM BL motor (9), Trap PM BL motor (10)	SCI motor (7)	RO	Txt			PT	US

Table 5-3 Menu 2 Input mapping

Parameter		Range(⇕)	Default(⇨)	Type					
S.02.001	Input mapping parameter 1	0 to 499999	10040	RW	Num	DE		PT	US
S.02.002	Input mapping parameter 2	0 to 499999	2001	RW	Num	DE		PT	US
S.02.003	Input mapping parameter 3	0 to 499999	0	RW	Num	DE		PT	US
S.02.004	Input mapping parameter 4	0 to 499999	0	RW	Num	DE		PT	US
S.02.005	Input mapping parameter 5	0 to 499999	0	RW	Num	DE		PT	US
S.02.006	Input mapping parameter 6	0 to 499999	0	RW	Num	DE		PT	US
S.02.007	Input mapping parameter 7	0 to 499999	0	RW	Num	DE		PT	US
S.02.008	Input mapping parameter 8	0 to 499999	0	RW	Num	DE		PT	US
S.02.009	Input mapping parameter 9	0 to 499999	0	RW	Num	DE		PT	US
S.02.010	Input mapping parameter 10	0 to 499999	0	RW	Num	DE		PT	US
S.02.011	Input mapping parameter 11	0 to 499999	0	RW	Num	DE		PT	US
S.02.012	Input mapping parameter 12	0 to 499999	0	RW	Num	DE		PT	US
S.02.013	Input mapping parameter 13	0 to 499999	0	RW	Num	DE		PT	US
S.02.014	Input mapping parameter 14	0 to 499999	0	RW	Num	DE		PT	US
S.02.015	Input mapping parameter 15	0 to 499999	0	RW	Num	DE		PT	US
S.02.016	Input mapping parameter 16	0 to 499999	0	RW	Num	DE		PT	US
S.02.017	Input mapping parameter 17	0 to 499999	0	RW	Num	DE		PT	US
S.02.018	Input mapping parameter 18	0 to 499999	0	RW	Num	DE		PT	US
S.02.019	Input mapping parameter 19	0 to 499999	0	RW	Num	DE		PT	US
S.02.020	Input mapping parameter 20	0 to 499999	0	RW	Num	DE		PT	US
S.02.021	Input mapping parameter 21	0 to 499999	0	RW	Num	DE		PT	US
S.02.022	Input mapping parameter 22	0 to 499999	0	RW	Num	DE		PT	US
S.02.023	Input mapping parameter 23	0 to 499999	0	RW	Num	DE		PT	US
S.02.024	Input mapping parameter 24	0 to 499999	0	RW	Num	DE		PT	US
S.02.025	Input mapping parameter 25	0 to 499999	0	RW	Num	DE		PT	US
S.02.026	Input mapping parameter 26	0 to 499999	0	RW	Num	DE		PT	US
S.02.027	Input mapping parameter 27	0 to 499999	0	RW	Num	DE		PT	US
S.02.028	Input mapping parameter 28	0 to 499999	0	RW	Num	DE		PT	US

Table 5-4 Menu 3 Output mapping

Parameter		Range(⇕)	Default(⇨)	Type					
S.03.001	Output mapping parameter 1	0 to 499999	6042	RW	Num	DE		PT	US
S.03.002	Output mapping parameter 2	0 to 499999	1021	RW	Num	DE		PT	US
S.03.003	Output mapping parameter 3	0 to 499999	0	RW	Num	DE		PT	US
S.03.004	Output mapping parameter 4	0 to 499999	0	RW	Num	DE		PT	US
S.03.005	Output mapping parameter 5	0 to 499999	0	RW	Num	DE		PT	US
S.03.006	Output mapping parameter 6	0 to 499999	0	RW	Num	DE		PT	US
S.03.007	Output mapping parameter 7	0 to 499999	0	RW	Num	DE		PT	US
S.03.008	Output mapping parameter 8	0 to 499999	0	RW	Num	DE		PT	US
S.03.009	Output mapping parameter 9	0 to 499999	0	RW	Num	DE		PT	US
S.03.010	Output mapping parameter 10	0 to 499999	0	RW	Num	DE		PT	US
S.03.011	Output mapping parameter 11	0 to 499999	0	RW	Num	DE		PT	US
S.03.012	Output mapping parameter 12	0 to 499999	0	RW	Num	DE		PT	US
S.03.013	Output mapping parameter 13	0 to 499999	0	RW	Num	DE		PT	US
S.03.014	Output mapping parameter 14	0 to 499999	0	RW	Num	DE		PT	US
S.03.015	Output mapping parameter 15	0 to 499999	0	RW	Num	DE		PT	US
S.03.016	Output mapping parameter 16	0 to 499999	0	RW	Num	DE		PT	US
S.03.017	Output mapping parameter 17	0 to 499999	0	RW	Num	DE		PT	US
S.03.018	Output mapping parameter 18	0 to 499999	0	RW	Num	DE		PT	US
S.03.019	Output mapping parameter 19	0 to 499999	0	RW	Num	DE		PT	US
S.03.020	Output mapping parameter 20	0 to 499999	0	RW	Num	DE		PT	US
S.03.021	Output mapping parameter 21	0 to 499999	0	RW	Num	DE		PT	US
S.03.022	Output mapping parameter 22	0 to 499999	0	RW	Num	DE		PT	US
S.03.023	Output mapping parameter 23	0 to 499999	0	RW	Num	DE		PT	US
S.03.024	Output mapping parameter 24	0 to 499999	0	RW	Num	DE		PT	US
S.03.025	Output mapping parameter 25	0 to 499999	0	RW	Num	DE		PT	US
S.03.026	Output mapping parameter 26	0 to 499999	0	RW	Num	DE		PT	US
S.03.027	Output mapping parameter 27	0 to 499999	0	RW	Num	DE		PT	US
S.03.028	Output mapping parameter 28	0 to 499999	0	RW	Num	DE		PT	US

Table 5-5 Menu 4 Fault values

Parameter		Range(⇕)	Default(⇨)	Type					
S.04.001	Output Fault value 1	-2^{31} to $2^{31}-1$	0	RW	Num				US
S.04.002	Output Fault value 2	-2^{31} to $2^{31}-1$	0	RW	Num				US
S.04.003	Output Fault value 3	-2^{31} to $2^{31}-1$	0	RW	Num				US
S.04.004	Output Fault value 4	-2^{31} to $2^{31}-1$	0	RW	Num				US
S.04.005	Output Fault value 5	-2^{31} to $2^{31}-1$	0	RW	Num				US
S.04.006	Output Fault value 6	-2^{31} to $2^{31}-1$	0	RW	Num				US
S.04.007	Output Fault value 7	-2^{31} to $2^{31}-1$	0	RW	Num				US
S.04.008	Output Fault value 8	-2^{31} to $2^{31}-1$	0	RW	Num				US
S.04.009	Output Fault value 9	-2^{31} to $2^{31}-1$	0	RW	Num				US
S.04.010	Output Fault value 10	-2^{31} to $2^{31}-1$	0	RW	Num				US
S.04.011	Output Fault value 11	-2^{31} to $2^{31}-1$	0	RW	Num				US
S.04.012	Output Fault value 12	-2^{31} to $2^{31}-1$	0	RW	Num				US
S.04.013	Output Fault value 13	-2^{31} to $2^{31}-1$	0	RW	Num				US
S.04.014	Output Fault value 14	-2^{31} to $2^{31}-1$	0	RW	Num				US
S.04.015	Output Fault value 15	-2^{31} to $2^{31}-1$	0	RW	Num				US
S.04.016	Output Fault value 16	-2^{31} to $2^{31}-1$	0	RW	Num				US
S.04.017	Output Fault value 17	-2^{31} to $2^{31}-1$	0	RW	Num				US
S.04.018	Output Fault value 18	-2^{31} to $2^{31}-1$	0	RW	Num				US
S.04.019	Output Fault value 19	-2^{31} to $2^{31}-1$	0	RW	Num				US
S.04.020	Output Fault value 20	-2^{31} to $2^{31}-1$	0	RW	Num				US
S.04.021	Output Fault value 21	-2^{31} to $2^{31}-1$	0	RW	Num				US
S.04.022	Output Fault value 22	-2^{31} to $2^{31}-1$	0	RW	Num				US
S.04.023	Output Fault value 23	-2^{31} to $2^{31}-1$	0	RW	Num				US
S.04.024	Output Fault value 24	-2^{31} to $2^{31}-1$	0	RW	Num				US
S.04.025	Output Fault value 25	-2^{31} to $2^{31}-1$	0	RW	Num				US
S.04.026	Output Fault value 26	-2^{31} to $2^{31}-1$	0	RW	Num				US
S.04.027	Output Fault value 27	-2^{31} to $2^{31}-1$	0	RW	Num				US
S.04.028	Output Fault value 28	-2^{31} to $2^{31}-1$	0	RW	Num				US

Table 5-6 Menu 9 Resources

Parameter		Range(⇕)	Default(⇨)	Type					
S.09.030	PCB temperature	-128 to 127 ^{0}C		RO	Num	ND	NC	PT	

6 Parameters

6.1 Menus

Table 6-1 below details each of the module's internal menus.

Table 6-1 SI-DeviceNet Internal Menu descriptions

Menu	Description
S.0	Module information
S.1	DeviceNet setup
S.2	Input mapping
S.3	Output mappings
S.4	Fault values
S.9	Resources

S is the slot number where the module is installed.

The module's menu 0 is also displayed in menu 15, 16 or 17 on the drive depending on which slot the module is installed in. Table 6-2 below shows the location of module's menu 0 on the drive.

Table 6-2 SI-DeviceNet menu 0 locations on the drive

Slot number	Menu 0 location
1	15
2	16
3	17

6.2 Module menu 0 - Module Information

All parameters in **S.00.ppp** (i.e. menu 0 within the Option module menus) are also present in menus 15, 16 or 17 depending on the slot that the module is installed to e.g. Pr **3.00.007** is also present as **17.007**.

The functionality and properties of the parameters are identical between the two menus.

Module ID code		
S.00.001	Default	447
	Range	0 to 999
	Access	RO

Pr **S.00.001** displays the ID number for the Option Module. For SI-DeviceNet, this is 447.

SI-DeviceNet firmware version		
S.00.002	Default	N/A
	Range	00.00.00.00 to 99.99.99.99
	Access	RO

The firmware version of the Option module is in the format of **ww.xx.yy.zz**

SI-DeviceNet hardware version		
S.00.003	Default	N/A
	Range	00.00 to 99.99
	Access	RO

The hardware version of the Option module is in the format of **yy.zz**

Serial Number LS		
S.00.004	Default	N/A
	Range	0 to 99999999
	Access	RO

Serial Number MS		
S.00.005	Default	N/A
	Range	0 to 99999999
	Access	RO

The module serial number is available as a pair of 32-bit values where Serial Number LS (Pr **S.00.004**) provide the least significant 8 decimal digits, and Serial Number MS (Pr **S.00.005**) provides the most significant 8 decimal digits. The reconstructed serial number is ((**S.00.005** x 100000000) + **S.00.004**). For example serial number "0001234567898765" would be stored as **S.00.005** = 12345 and **S.00.004** = 67898765.

Module Status		
S.00.006	Default	N/A
	Range	Initializing (0) to Error (3)
	Access	RO

This parameter displays the current status of the module. All possible values are shown in the table below.

Value	Text	Description
0	Initializing	Module is currently initializing.
1	Ok	Module has initialized and has found no errors.
2	Config	A configuration error has been detected in one of the communications protocols or user program.
3	Error	An error has occurred preventing the firmware or user program from running correctly.

Reset module		
S.00.007	Default	Off (0)
	Range	Off (0) or On (1)
	Access	RW

Changes to the SI-DeviceNet configuration will not take effect until the SI-DeviceNet has been reset.

To reset the SI-DeviceNet:

- Set Pr **S.00.007** to On (1).
- When the sequence has been completed, Pr **S.00.007** will be reset to Off (0).
- The SI-DeviceNet will reset using the updated configuration.

NOTE This sequence does NOT store the SI-DeviceNet configuration parameters in the drive or the SI-DeviceNet flash memory. This parameter will change back to Off immediately, and as such the change may not be visible on the display.

Default DeviceNet Interface		
S.00.008	Default	Off (0)
	Range	Off (0) or On (1)
	Access	RW

If the host drive is defaulted (see the drive user guide for details), it will also clear the current configuration for the slot SI-DeviceNet is installed to.

This can be performed as follows:

- Set Pr **S.00.008** to On (1).
- Reset the module by setting Pr **S.00.007** to On (1).
- SI-DeviceNet communications will be stopped.
- Default parameter values for the SI-DeviceNet will be loaded.
- The SI-DeviceNet will reset using the default values.

6.3 Module menu 1 - DeviceNet Setup

Menu 1 contains all the parameters relating to the setup of the DeviceNet interface on the SI-DeviceNet module.

Enable DeviceNet Interface		
S.01.001	Default	On (1)
	Range	Off (0) or On (1)
	Access	RO

This parameter displays a value of On (1) to indicate that the DeviceNet Interface has been enabled.

Reset DeviceNet Interface		
S.01.002	Default	Off (0)
	Range	Off (0) or On (1)
	Access	RW

Changes to the SI-DeviceNet configuration will not take effect until the SI-DeviceNet has been reset.

To reset the SI-DeviceNet:

- Set Pr **S.01.002** to On (1).
- When the sequence has been completed, Pr **S.01.002** will be reset to Off (0).
- The SI-DeviceNet will reset using the updated configuration.

NOTE This sequence does NOT store the SI-DeviceNet configuration parameters in the drive or the SI-DeviceNet flash memory. This parameter will change back to Off immediately, and as such the change may not be visible in the display.

Default DeviceNet Interface		
S.01.003	Default	Off (0)
	Range	Off (0) or On (1)
	Access	RW

If the host drive is defaulted (see the drive user guide for details), it will also clear the current configuration for the slot SI-DeviceNet is installed to.

This can be performed as follows:

- Set Pr **S.01.003** to On (1).
- Reset the DeviceNet interface by setting Pr **S.01.002** to On (1).
- SI-DeviceNet communications will be stopped.
- Default parameter values for the DeviceNet interface will be loaded.
- The SI-DeviceNet will reset using the default values.

DeviceNet node address		
S.01.004	Default	63
	Range	0 to 63
	Access	RW

Every node on a DeviceNet network must be given a unique network node address. To activate a change in the node address value, the SI-DeviceNet must be reset (Pr **S.01.002** or **MM.007** = On (1). Address number 63 is reserved for system use.

Baud rate		
S.01.005	Default	125 kbps (0)
	Range	Auto Detect (-1) to 500 kbps (2)
	Access	RW

The SI-DeviceNet will automatically detect the DeviceNet network data rate and synchronize to it. Pr **S.01.005** will indicate the data rate that has been detected by the SI-DeviceNet.

A value of -1 indicates that the SI-DeviceNet has not detected any activity on the DeviceNet network, and is waiting for the master controller to start communicating.

NOTE The DeviceNet cyclic data rate parameter can be changed, but this will not affect the data rate at which the SI-DeviceNet communicates. The data rate display will be updated when the SI-DeviceNet is reset.

Pr S.01.005	Bits/s
-1	Auto-detecting
0	125 k
1	250 k
2	500 k

DeviceNet network diagnostic		
S.01.006	Default	N/A
	Range	0 to 7
	Access	RO

DeviceNet cyclic data rate		
S.01.007	Default	N/A
	Range	0 to 9999 Messages/s
	Access	RO

The DeviceNet network activity can be monitored in the SI-DeviceNet operating status parameter, Pr **S.01.006**. When the SI-DeviceNet is in data exchange with the DeviceNet master controller, Pr **S.01.007** will give an indication of the number of cyclic data messages that are being processed per second.

All possible values of **S.01.006** are given in the table below.

Value	Text	Description
0	Network OK	Network ok/healthy
1	Init OK	The SI-DeviceNet has initialized correctly and is waiting for the DeviceNet master to initialize communications.
2	No Cyclic	No cyclic data has been recognized. This could be due to the length of the mapping data is not equal to the master setup.
3	Init Failed	A part of the SI-DeviceNet initialization sequence was not successful. If this fault persists after a power-cycle, replace the SI-DeviceNet.
4	Comm Fault	Fault found in the communications of the module. This could be due to different devices configured to use different baud rates.
5	No 24 V	No 24 V external PSU has been detected.
6	Baud detecting	Automatic baud rate detection is in progress.
7	Initializing	The module is currently initializing.

Network loss selection		
S.01.010	Default	200 ms
	Range	0 to 3000 ms
	Access	RO

The network loss detection feature provides a method which ensures that communication with the master is still present. The SI-DeviceNet resets an internal timer when a valid message is received from the DeviceNet network, if a message is not received within the specified period, network loss is detected.

NOTE

Network loss detection is not enabled internally until cyclic data has been detected. This prevents spurious network loss timeouts while the DeviceNet master controller is initializing the DeviceNet network.

Timeout action		
S.01.011	Default	Trip (0)
	Range	Trip (0) to No action (4)
	Access	RW

Pr **S.01.011** determines the action to take when a timeout specified by Pr **S.01.010** occurs. All possible actions and descriptions are listed below.

Value	Text	Description
0	Trip	Trip the drive
1	Send flt values	Send fault values to output parameters
2	Clear output	PLC output parameters will have values set to zero
3	Hold last	Hold the last value in the PLC output parameters
4	No action	No action with output parameters

When a value of "Trip" is selected in Pr **S.01.011** and no cyclic communications have been detected in a time period defined by Pr **S.01.010** then the drive will trip displaying "SlotX Error" with a sub-trip string of "Link loss".

If the network loss timeout time (Pr **S.01.010**) is reduced too far, spurious network losses may occur due to a time-out occurring before the time period under normal operating conditions.

WARNING

Network loss detection can be disabled by setting Pr **S.01.010** to 0. It is the user's responsibility to ensure that adequate safety precautions are taken to prevent damage or injury by disabling the drive in the event of a loss of communications.

If Pr **S.01.011** is set to "Send flt values", the fault values entered in Pr **S.04.001** to Pr **S.04.028** are sent to the mapped output parameters when a network timeout error occurs.

e.g. if Pr **S.03.001** = 20021 and Pr **S.03.002** = 20022 and a timeout error occurs, the value in Pr **S.04.001** will be sent to Pr **20.021** and the value in Pr **S.04.002** will be sent to Pr **20.022** as defined in the out mapping parameters.

If Pr **S.01.011** is set to "Clear output", all PLC output parameter values are set to zero.

e.g. if Pr **S.03.001** = 20021 and Pr **S.03.002** = 20022 and a timeout error occurs, Pr **20.021** and Pr **20.022** will be set to 0.

If Pr **S.01.011** is set to "Hold last", the last values sent by the PLC master are held in the mapped output parameters.

e.g. if Pr **S.03.001** = 20021 and Pr **S.03.002** = 20022 and a timeout error occurs, Pr **20.021** and Pr **20.022** will equal the last values sent by the PLC master.

If Pr **S.01.011** is set to "No action", then the module will not write any value to any mapped output parameters.

Timeout Event Destination		
S.01.012	Default	This Slot (0)
	Range	This Slot (0) to Slot 4 (4)
	Access	RW

Timeout Event Type		
S.01.013	Default	No Event (0)
	Range	No Event (0) to Event4 (4)
	Access	RW

When a timeout occurs, the SI-DeviceNet module can trigger an event defined by Pr **S.01.013** to a destination, such as an Option Module installed to a different slot on the drive, defined by Pr **S.01.012**.

NOTE

If triggering an event to a different Option Module, Pr **S.01.012** must point to a slot where a compatible Option Module is installed to.

Cyclic data alignment		
S.01.014	Default	32 (0)
	Range	32 (0) or 16 (1) bits
	Access	RW

By default, the SI-DeviceNet uses 32 bits for each data channel, even if the target parameter in the drive is a 16-bit parameter. This strategy (known as casting), ensures that the cyclic data transmitted over the DeviceNet network remains aligned with the memory locations in 32-bit PLC's. When cyclic data alignment (Pr **S.01.014**) is set to "16 bits", a data channel will only use 32 bits if the target drive parameter is a 32-bit parameter. If the target drive parameter is only 1, 8 or 16 bits wide, 16 bits will be used for that particular data channel as shown in the following table.

Parameter size (bits)	Actual data size (bits) Alignment = 16 bits	Actual data size (bits) Alignment = 32 bits
1	16	32
8		
16		
32	32	

The following examples demonstrate setting up a network using five cyclic channels for both IN and OUT data with the cyclic data alignment first set to 32 bits and then set to 16 bits.

Table 6-3 shows the mapping parameters where five IN and five OUT cyclic data channels are required. With data alignment set to 32 bits, each data channel uses 32 bits (two data words, so a total of ten words are required).

Table 6-3 Mapping parameters

Data channel	Data words used	Mapping for slot 3	Setting	Data width (bits)	Mapping status
IN channel 1	IN word 0, 1	Pr **3.02.001**	0.10.040	16	Pr **10.040**, status word
IN channel 2	IN word 2, 3	Pr **3.02.002**	0.02.001	32	Pr **02.001**, post-ramp speed reference
IN channel 3	IN word 4, 5	Pr **3.02.003**	0.04.020	16	Pr **04.020**, Motor load as % of rated motor load
IN channel 4	IN word 6, 7	Pr **3.02.004**	0.14.021	16	Pr **14.021**, PID1 feedback
IN channel 5	IN word 8, 9	Pr **3.02.005**	0.14.001	16	Pr **14.001**, PID1 output
OUT channel 1	OUT word 0, 1	Pr **3.03.001**	0.06.042	16	Pr **06.042**, control word
OUT channel 2	OUT word 2, 3	Pr **3.03.002**	0.01.021	32	Pr **01.021**, preset reference 1
OUT channel 3	OUT word 4, 5	Pr **3.03.003**	0.02.011	32	Pr **02.011**, acceleration rate 1
OUT channel 4	OUT word 6, 7	Pr **3.03.004**	0.02.021	32	Pr **02.021**, deceleration rate 1
OUT channel 5	OUT word 8, 9	Pr **3.03.005**	0.14.020	16	Pr **14.020**, PID1 reference

It is advisable to keep 16-bit parameters paired together. This prevents mis-alignment of cyclic data with 32-bit PLC registers when using auto-mapping facilities to configure the DeviceNet network. By swapping the mappings for input channel 2 with input channel 3 and moving output channel 5 to output channel 2, the data channel structure will appear as shown in the following table.

Data channel	Data words used	Mapping for slot 3	Setting	Data width (bits)	Mapping status
IN channel 1	IN word 0	Pr **3.02.001**	0.10.040	16	Pr **10.040**, status word
IN channel 2	IN word 1	Pr **3.02.002**	0.04.020	16	Pr **04.020**, Motor load as % of rated motor load
IN channel 3	IN word 2, 3	Pr **3.02.003**	0.02.001	32	Pr **02.001**, post-ramp speed reference
IN channel 4	IN word 4	Pr **3.02.004**	0.14.021	16	Pr **14.021**, PID1 feedback
IN channel 5	IN word 5	Pr **3.02.005**	0.14.001	16	Pr **14.001**, PID1 output
OUT channel 1	OUT word 0	Pr **3.03.001**	0.06.042	16	Pr **06.042**, control word
OUT channel 2	OUT word 1	Pr **3.03.002**	0.14.020	16	Pr **14.020**, PID1 reference
OUT channel 3	OUT word 2, 3	Pr **3.03.003**	0.01.021	32	Pr **01.021**, preset reference 1
OUT channel 4	OUT word 4, 5	Pr **3.03.004**	0.02.011	32	Pr **02.011**, acceleration rate
OUT channel 5	OUT word 6, 7	Pr **3.03.005**	0.02.021	32	1Pr **02.021**, deceleration rate 1

Input cyclic assembly object ID		
S.01.018	Default	112
	Range	70-73, 106-160 (even)
	Access	RW

Output cyclic assembly object ID		
S.01.019	Default	113
	Range	20-23, 107-161 (odd)
	Access	RW

Pr **S.01.018** and **S.01.019** control the input and output DeviceNet objects and also the number of polled words that are to be sent and received.

Table 6-4 on page 39 shows the number of the polled words corresponding to Pr **S.01.018** and Pr **S.01.019**.

Table 6-4 Polled words

Polled words	Input assembly object (Pr S.01.018)	Output assembly object (Pr S.01.019)
1	106	107
2	108	109
3	110	111
4	112	113
5	114	115
6	116	117
7	118	119
8	120	121
9	122	123
10	124	125
11	126	127
12	128	129
13	130	131
14	132	133
15	134	135
16	136	137
17	138	139
18	140	141
19	142	143
20	144	145
21	146	147
22	148	149
23	150	151
24	152	153
25	154	155
26	156	157
27	158	159
28	160	161

There are several assembly objects that are covered in the DeviceNet specification that are available for use. See the DeviceNet objects chapter.

Input cyclic mapping length		
S.01.020	Default	4
	Range	0 to 28
	Access	RO

Output cyclic mapping length		
S.01.021	Default	4
	Range	0 to 28
	Access	RO

Pr **S.01.020** and Pr **S.01.021** indicate the current mapping length used for sending and receiving data.
To set a different value for the mapping lengths, refer to Pr **S.01.018** and Pr **S.01.019**.

Input mapping status		
S.01.022	Default	N/A
	Range	No error (0) to Reserved (10)
	Access	RO

Output mapping status		
S.01.023	Default	N/A
	Range	No error (0) to Reserved (10)
	Access	RO

If the DeviceNet Network Diagnostic parameter (Pr **S.01.006**) indicates “Init Failed”, a mapping configuration error has been could have been detected. The reason for the error is indicated by the SI-DeviceNet input mapping status parameter (Pr **S.01.022**) and the SI-DeviceNet output mapping status parameter (Pr **S.01.023**).

When a mapping error has been corrected, reset the SI-DeviceNet module by setting Pr **S.01.002** or **MM.007** to On (1).

The mapping error codes are described in the table below:

Value	Text	Description
0	No error	No error has been detected during mapping initialization.
1	Par impossible	The parameter may not exist or may not be readable.
2	Hole in mapping	Cyclic data mapping parameters are not contiguous.
3	Dup mapping	Two or more cyclic data mapping configuration parameters have been configured with the same destination parameter reference.
4	Length exceed	The length of the mapped parameters exceeds the length of the selected assembly object.
5	Obj not support	The selected assembly object is not supported.
6	Pre & uncompress	If the predefined object is selected, the data alignment must be set to 16 bits.
7	Type unmatched	The IN and OUT objects both must be predefined objects, or neither.
8	Memory fault	Failed to allocate memory for mapping.
9	No mapping	No parameter is assigned to the mapping.
10	Reserved	Reserved

Input processing time		
S.01.024	Default	N/A
	Range	0 to 65535 ms
	Access	RO

Output processing time		
S.01.025	Default	N/A
	Range	0 to 65535 ms
	Access	RO

Pr **S.01.024** and Pr **S.01.025** display the input and output processing times respectively. The input processing time (Pr **S.01.024**) shows the time taken from the value being sent from the drive to the value being written to the master in milliseconds. The output processing time (Pr **S.01.025**) shows the time taken from the value being sent from the master to the value being successfully written to the drive in milliseconds.

Input consistency enable		
S.01.026	Default	Off (0)
	Range	Off (0) or On (1)
	Access	RW

Input consistency trigger parameter		
S.01.027	Default	N/A
	Range	0.00.000 to 4.99.999
	Access	RW

Output consistency enable		
S.01.028	Default	Off (0)
	Range	Off (0) or On (1)
	Access	RW

Output consistency trigger parameter		
S.01.029	Default	N/A
	Range	0.00.000 to 4.99.999
	Access	RW

The SI-DeviceNet module provides an input/output consistency feature which ensures that the data in the input or output mappings is only transferred between the SI-DeviceNet module and the master when the mapped parameters are ready. This prevents data skew between parameters in the input/output mappings.

If Input consistency action (Pr **S.01.026**) and Output consistency action (Pr **S.01.028**) are set to 0 (i.e. default settings), then the input/output consistency features are disabled so that input and output data is always read from or written to the master/ module.

If Input Consistency Action (Pr **S.01.026**) is set to On (1), the SI-DeviceNet module will check the value of the parameter specified by the Input Consistency Trigger Source Parameter (Pr **S.01.027**). If the input trigger source parameter defined by Pr **S.01.027** is set to a non-zero value (for example by a user program in an applications module), this indicates to the SI-DeviceNet module that all the mapped parameters are ready to be read. The module will then read the mapped parameters, transfer them to the master and will then clear the input trigger source parameter to zero. When the input trigger source parameter is set to zero, the SI-DeviceNet module will continue to transfer the previously read data to the master.

If Output Consistency Action (Pr **S.01.028**) is set to On (1), the SI-DeviceNet module will check the value of the parameter specified by the Output Consistency Trigger Source Parameter (Pr **S.01.029**). The output trigger source parameter defined by Pr **S.01.029** will initially be set to 1.

If the output trigger source parameter is set to zero (for example by a user program in an applications module), this indicates to the SI-DeviceNet module that all the mapped parameters are ready to be written to. The module will then write the data from the master into the mapped parameters, and will then set the output trigger source parameter to 1. When the output trigger source parameter is set to 1, it indicates to the SI-DeviceNet module that the mapped parameters are not ready to be written to, and therefore any new data from the master will not be written to the mapped parameters in the drive until the output trigger source parameter is again set to zero.

Custom product type		
S.01.031	Default	Unidrive M (0)
	Range	Unidrive M (0) or Unidrive SP (1)
	Access	RW

A backwards compatibility mode is present in SI-DeviceNet. Pr **S.01.031** can be used to allow the SI-DeviceNet module to appear as an SM-DeviceNet module, this only applies to the network and not the control/status words and parameter sizes. The module must be configured to match the existing network settings of the drive it is replacing (including any parameter mappings).

Using the compatibility mode allows the replacement of drives on a DeviceNet network, without having to make any changes to the master network configuration, it changes the identity code of the module so that the master believes that a similar type drive is present for a particular node.

Custom product version		
S.01.032	Default	0
	Range	0 to 9999
	Access	RW

When compatibility mode has been enabled, Pr **S.01.032** should contain the correct product code to respond to the DeviceNet master. This product code should match the product code that is being used in the appropriate EDS files.

NOTE When using compatibility mode, ensure that the correct EDS file for the simulated drive is being used and not the actual drive.

WARNING This mode only changes the network to emulate the Unidrive SP on the network. Changes to the control method and data size differences must still be considered. This mode does NOT allow direct replacement.

Bus Off trip		
S.01.034	Default	Enable (0)
	Range	Enable (0) or Disable (1)
	Access	RW

The CAN hardware layer used by DeviceNet has a built-in safety mechanism where nodes experiencing regular problem with receiving or transmitting CAN frames will go off line. In this case, the SI-DeviceNet will trip the drive and it will not be possible to communicate with the drive via DeviceNet until the SI-DeviceNet has been reset.

Bus Off errors will generally only occur if the DeviceNet network is broken, the wiring becomes faulty or there is noise on the network. However, in some applications, such as a continuous casting process, there is a requirement for the drive to continue to run in the event of a major network failure.

When Pr **S.01.034** is set to Disable (1), the BUS Off condition may still be entered, but the SI-DeviceNet does not trip the drive. Some external provision must be made to disable the drive when the process has reached a point at which it is safe to stop.

Motor 1 type		
S.01.040	Default	FC DC Motor (2)
	Range	FC DC Motor (2) to Trapezoidal PM BL Motor (10)
	Access	RO

Motor 2 type		
S.01.041	Default	FC DC Motor (2)
	Range	FC DC Motor (2) to Trapezoidal PM BL Motor (10)
	Access	RO

There are 2 instances of the Motor Data object. Instance 1 will represent the Menu 5 motor information (Motor Map 1) and instance 2 will represent the menu 21 motor map. (Motor Map 2) The instance being used by the other dependant DeviceNet objects will be determined by Pr **21.015**. Pr **21.015** is polled in the background task, so the user should be aware that during motor map changeover, the rpm speed reference might not be accurate.

6.4 Module menu 2 - Input Mappings

Menu 2 contains all the mapping parameters relating to the IN channels of the module.

The values set in each parameter are in the format of **S.mm.ppp** where:

S = slot number of the target/source parameter

mm = menu number of the target /source parameter

ppp = parameter number of the target/source parameter

IN channel	Mapping parameter	Default value
1	Pr **S.02.001**	0.10.040
2	Pr **S.02.002**	0.02.001
3	Pr **S.02.003**	0.00.000
4	Pr **S.02.004**	0.00.000
5	Pr **S.02.005**	0.00.000
6	Pr **S.02.006**	0.00.000
7	Pr **S.02.007**	0.00.000
8	Pr **S.02.008**	0.00.000
9	Pr **S.02.009**	0.00.000
10	Pr **S.02.010**	0.00.000
11	Pr **S.02.011**	0.00.000
12	Pr **S.02.012**	0.00.000
13	Pr **S.02.013**	0.00.000
14	Pr **S.02.014**	0.00.000
15	Pr **S.02.015**	0.00.000
16	Pr **S.02.016**	0.00.000
17	Pr **S.02.017**	0.00.000
18	Pr **S.02.018**	0.00.000
19	Pr **S.02.019**	0.00.000
20	Pr **S.02.020**	0.00.000
21	Pr **S.02.021**	0.00.000
22	Pr **S.02.022**	0.00.000
23	Pr **S.02.023**	0.00.000
24	Pr **S.02.024**	0.00.000
25	Pr **S.02.025**	0.00.000
26	Pr **S.02.026**	0.00.000
27	Pr **S.02.027**	0.00.000
28	Pr **S.02.028**	0.00.000

6.5 Module menu 3 - Output Mappings

Menu 3 contains all the mapping parameters relating to the OUT channels of the module.

The values set in each parameter are in the format of **S.mm.ppp** where:

S = slot number of the target/source parameter

mm = menu number of the target /source parameter

ppp = parameter number of the target/source parameter

OUT channel	Mapping parameter	Default value
1	Pr **S.03.001**	0.06.042
2	Pr **S.03.002**	0.01.021
3	Pr **S.03.003**	0.00.000
4	Pr **S.03.004**	0.00.000
5	Pr **S.03.005**	0.00.000
6	Pr **S.03.006**	0.00.000
7	Pr **S.03.007**	0.00.000
8	Pr **S.03.008**	0.00.000
9	Pr **S.03.009**	0.00.000
10	Pr **S.03.010**	0.00.000
11	Pr **S.03.011**	0.00.000
12	Pr **S.03.012**	0.00.000
13	Pr **S.03.013**	0.00.000
14	Pr **S.03.014**	0.00.000
15	Pr **S.03.015**	0.00.000
16	Pr **S.03.016**	0.00.000
17	Pr **S.03.017**	0.00.000
18	Pr **S.03.018**	0.00.000
19	Pr **S.03.019**	0.00.000
20	Pr **S.03.020**	0.00.000
21	Pr **S.03.021**	0.00.000
22	Pr **S.03.022**	0.00.000
23	Pr **S.03.023**	0.00.000
24	Pr **S.03.024**	0.00.000
25	Pr **S.03.025**	0.00.000
26	Pr **S.03.026**	0.00.000
27	Pr **S.03.027**	0.00.000
28	Pr **S.03.028**	0.00.000

6.6 Module menu 4 - Fault Values

Menu 4 contains all the fault values that are sent to the mapped output destination parameters when fault values have been configured to be sent using an action parameter.

OUT channel	Parameter
1	Pr **S.04.001**
2	Pr **S.04.002**
3	Pr **S.04.003**
4	Pr **S.04.004**
5	Pr **S.04.005**
6	Pr **S.04.006**
7	Pr **S.04.007**
8	Pr **S.04.008**
9	Pr **S.04.009**
10	Pr **S.04.010**
11	Pr **S.04.011**
12	Pr **S.04.012**
13	Pr **S.04.013**
14	Pr **S.04.014**
15	Pr **S.04.015**
16	Pr **S.04.016**
17	Pr **S.04.017**
18	Pr **S.04.018**
19	Pr **S.04.019**
20	Pr **S.04.020**
21	Pr **S.04.021**
22	Pr **S.04.022**
23	Pr **S.04.023**
24	Pr **S.04.024**
25	Pr **S.04.025**
26	Pr **S.04.026**
27	Pr **S.04.027**
28	Pr **S.04.028**

Module menu 9 - Resources

PCB temperature 1		
S.09.030	Default	N/A
	Range	-128 to 127°C
	Access	RO

PCB temperature 2		
S.09.031	Default	N/A
	Range	-128 to 127°C
	Access	RO

Parameters **S.09.030** and **S.09.031** display the current temperature of the 2 internal thermistors within the option module.

7 Non cyclic data

7.1 Introduction

"Explicit data" is the non cyclic data channel on DeviceNet that provides access to any parameter and DeviceNet object within SI-DeviceNet. As such, it is always enabled and active on SI-DeviceNet. Object access using explicit data is controlled entirely by the master controller program, and is not usually configured in any way when the DeviceNet network mapping is defined.

NOTE As non-cyclic data control is implemented entirely in the DeviceNet master controller, the method used will depend entirely on the type of master controller used.

7.2 Explicit parameter access

The Control Techniques object (Class 100 or 0x64) provides access to all drive parameters, using the parameters as shown:

Class code:	100 (0x64)	
Instance:	Menu	
Attribute:	Parameter	
Read Code:	14 (0x0E)	Get_Attribute_Single
Write Code:	16 (0x10)	Set_Attribute_Single

All supported pre-defined DeviceNet objects can also be accessed using explicit messaging. Refer to the master controller documentation for full details about explicit messaging, and how to implement explicit messaging within the particular master controller.

NOTE Menu 0 parameters in the drive can be access using instance 200 (0xC8).

When accessing drive parameters using the Control Techniques object, all parameters must be treated as signed 32-bit parameters.

NOTE Multiple parameter access (using the Get_Atttribute_All service) is not supported by SI-DeviceNet.

8 Control / status word

8.1 What are control and status words?

The control and status words allow the digital control and monitoring of the drive to be implemented using a single data word for each function. Each bit in the control word has a particular function and provides a method of controlling the output functions of the drive, such as run and direction. These words can be accessed using either cyclic or non-cyclic data.

Each bit in the status word provides feedback about the drives state of health and operational condition, such as drive OK, drive at speed, etc.

8.2 Control word

The SI-DeviceNet control word consists of 16 control bits some of which are reserved. See Table 8-1 for the individual bit function descriptions.

Table 8-1 Control word bit definitions

b15	b14	b13	b12	b11	b10	b9	b8
	KEYPAD WDOG	RESET	TRIP			JOG REV	REMOTE

b7	b6	b5	b4	b3	b2	b1	b0
AUTO	NOT STOP	RUN	FWD REV	RUN REV	JOG FWD	RUN FWD	ENABLE

To enable fieldbus control the fieldbus enable signal (Pr **06.043**) and the auto bit (bit7) must both be set to ‘1’. When the AUTO bit is reset to 0 the drive will revert to terminal control.

For safety reasons, the external HARDWARE ENABLE signal must be present before the fieldbus control word can be used to start the drive. This terminal is normally controlled by an external “Emergency Stop” circuit to ensure that the drive is disabled in an emergency situation.

The control word REMOTE bit directly controls the drive parameter Pr **01.042**, the function of which is to select the digital speed reference as the source of the drives speed reference. When the REMOTE bit is reset to 0 the drive will revert to using the external analog speed reference.

The actual digital speed reference selected when REMOTE is set to 1 will be Pr **01.021**, which is also the default mapping for the fieldbus speed reference. However Pr **01.015** can be used to change which of the digital references is selected. For further details on the drive digital speed references, please refer to the appropriate drive *User Guide*.

Table 8-2 lists in detail the function of each control word bit. For further in-depth details about drive control words and sequencing bits please refer to the appropriate drive *User Guides*.

NOTE When a trip occurs, the drive control word MUST be set to a safe, disabled state. This ensures that the drive does not re-start unexpectedly when it is reset. This can be achieved by continuously monitoring the drive status word and interlocking it with the control word.

NOTE By default data compression is off and therefore the control word will be cast as 32 bit with bits 16-31 reserved.

Table 8-2 Control word bit functions

Bit	Function	Description
0	ENABLE	Set to 1 to enable the drive. Resetting to 0 will immediately disable the drive, and the motor will **coast** to a stop. The external HARDWARE ENABLE signal must also be present before the drive can be enabled.
1	RUN FWD	Set to 1 (with ENABLE set to 1) to run the motor in the forward direction. When reset to 0, the drive will **decelerate** the motor to a controlled stop.
2	JOG FWD	Set to 1 to jog the motor forward. This signal needs to be used in conjunction with the ENABLE bit. This signal is overridden by a RUN, RUN REV or RUN FWD signal.
3	RUN REV	Set to 1 (with ENABLE set to 1) to run the motor in the reverse direction. When reset to 0, the drive will **decelerate** the motor to a controlled stop.
4	FWD REV	Set to 1 to select the reverse direction. Set to 0 to run in the forward direction. The RUN signal is used to start and stop the motor.
5	RUN	Set to 1 to run the motor. FWD REV is used to select the direction of motor rotation. When reset to 0, the drive will **decelerate** the motor to a controlled stop.
6	NOT STOP	Set to 1 to allow the sequencing bit in the drive to be latched. Refer to the drive *Advanced User Guide* for more details. If NOT STOP is zero, all latches are cleared and held at 0. Pr **06.004** must be correctly set for this to function.
7	AUTO	Set to 1 to enable fieldbus control of the drive Control Word. The Control Word Enable (Pr **06.043**) must also be set to 1. When reset to 0, the drive will operate under terminal control.
8	REMOTE	Set to 1 to select digital speed reference 1 (Pr **01.021**), and to 0 to select analog reference 1 (Pr **01.036**). REMOTE directly controls Pr **01.042**, so reference selector (Pr **01.014**) and preset selector (Pr **01.015**) must both be set to 0 (default) for the REMOTE bit to work properly.
9	JOG REV	Set to 1 to jog the motor in reverse. This signal needs to be used in conjunction with the ENABLE bit. This signal is overridden by a RUN/RUN REV/RUN FWD command.
10	Reserved	
11	Reserved	
12	TRIP	Set to 1 to trip the drive at any time. The trip display on the drive will be “Control Word” and the trip code will be 35. AUTO (b7) has no effect on this function. The trip cannot be cleared until TRIP is reset to 0.
13	RESET	A 0-1 transition of the RESET bit will reset the drive from a trip condition. If the reason for the trip is still present, or another fault condition has been detected, the drive will immediately trip again. When resetting the drive, it is recommended to check the status word to ensure that the reset was successful, before attempting to re-start the drive.
14	KEYPAD WDOG	This watchdog is provided for an external keypad or other devices where a break in the communication link must be detected. The watchdog system can be enabled and/or serviced if this bit is changed from zero to one while the control word enabled. Once the watchdog is enabled it must be serviced at least once every second or an “Watchdog” trip will occur. The watchdog is disabled when a “Watchdog” trip occurs, and so it must be re-enabled when the trip is reset.
15	Reserved	

8.3 Status word

The SI-DeviceNet status word consists of 16 control bits some of which are reserved. See the table below for the individual bit function descriptions.

b15	b14	b13	b12	b11	b10	b9	b8
Not Used	Supply Loss	Reverse Direction Running	Reverse Direction Commanded	Brake Resistor Alarm	Braking IGBT Active	Regenerating	Current Limit Active

b7	b6	b5	b4	b3	b2	b1	b0
Rated Load Reached	Above Set Speed	At Set Speed	Below Set Speed	Running At or Below Minimum Speed	Zero Speed	Drive Active	Drive OK/ Healthy

The fieldbus status word is mapped directly from the drive status word, Pr **10.040**.

Pr **10.040**, is generated by the values of several individual drive status bits. Table 7.3 *Mapping for 2 polled channels* on page 40 shows the function indicated by each bit in the status word when set to 1.

Table 8-3 Drive status word bit functions

Bit	Parameter	Description
0	Pr **10.001**	bit 0 = 0: Drive not ok (tripped). bit 0 = 1: Drive ok.
1	Pr **10.002**	**Drive active** When bit 1 = 1, the drive is in run mode.
2	Pr **10.003**	**Zero speed** In Open Loop mode, zero speed indicates that the absolute value of the post-ramp speed reference is at or below the zero speed threshold. In RFC-A and RFC-5 modes, zero speed indicates that the absolute value of speed feedback is at or below the zero speed threshold.
3	Pr **10.004**	**Running at or below minimum speed** In bipolar mode (Pr **01.010** = 1) Pr **10.004** is the same as zero speed, Pr **10.003** (See above). In unipolar mode, Pr **10.004** is set if the absolute value of the post-ramp speed reference (Pr **02.001**) or speed feedback (Pr **03.002**) is at or below minimum speed + 0.5Hz or 5 rpm (Minimum speed is defined by Pr **01.007**). This parameter is only set if the drive is running.
4	Pr **10.005**	**Below set speed** Only set if the drive is running at below set speed. Refer to Pr **03.006**, Pr **03.007** and Pr **03.009** in the drive documentation for more details.
5	Pr **10.006**	**At speed** Only set if the drive is running at set speed. Refer to Pr **03.006**, Pr **03.007** and Pr **03.009** in the drive documentation.

Bit	Parameter	Description
6	Pr **10.007**	**Above set speed** Only set if the drive is running at above set speed. Refer to Pr **03.006**, Pr **03.007** and Pr **03.009** in the drive documentation for more details.
7	Pr **10.008**	**Load reached** Indicates that the modulus of the active current is greater or equal to the rated active current, as defined in menu 4. Refer to the drive documentation for more details.
8	Pr **10.009**	**In current limit** Indicates that the current limits are active.
9	Pr **10.010**	**Regenerating** Indicates that power is being transferred from the motor to the drive. Regen mode: Indicates that power is being transferred from the drive to the supply.
10	Pr **10.011**	**Dynamic brake active** Indicates that the braking IGBT is active. If the IGBT becomes active, this parameter will remain on for at least one second.
11	Pr **10.012**	**Dynamic brake alarm** Dynamic brake alarm is set when the braking IGBT is active, and the braking energy accumulator is greater than 75 %.
12	Pr **10.013**	**Reverse direction commanded** Direction commanded is set to 1 if the Pre-ramp speed reference (Pr **01.003**) is negative and reset to 0 if the Pre-ramp speed reference is zero or positive.
13	Pr **10.014**	**Reverse direction running** A 0 indicates forward direction and a 1 indicates reverse direction. The source of this bit is Pr **02.001** for open loop mode and Pr **03.002** for RFC-A and RFC-S modes.
14	Pr **10.015**	**Supply loss** Supply loss indicates that the drive has detected a supply loss from the level of the DC bus voltage. This parameter can only become active if supply loss ride through or supply loss stop modes are selected. In regen mode, supply loss is the inverse of Pr **03.007**.
15	(Not Used)	**Reserved**

9 EDS Files

9.1 What are EDS files?

EDS (Electronic Data Sheets) files are text files that are used by SI-DeviceNet network configuration software tools. They contain information about the device, such as manufacturer, product type, product code, etc., and they also provide information on the default settings and functions supported by the device. Mapping information is also included that allows access to device parameters over the SI-DeviceNet network.

EDS files are not downloaded to the PLC or scanner, and are only used during network configuration. It is actually possible to configure a network without the EDS files.

9.2 Generic EDS files

Generic EDS files are available for all supported drives. These files are available from your local Control Techniques Drive Centre or supplier.

Drive icon files are also supplied for use with the SI-DeviceNet configuration software being used. EDS files must usually be installed into the software package being used to configure a SI-DeviceNet network. Refer to the software documentation supplied with the master for instructions on how to install EDS files. Control Techniques cannot provide specific technical support for any of these software packages.

10 Advanced Features

10.1 Supported Drive assembly objects

The DeviceNet specification includes a series of pre-defined assembly objects for different devices, including Drives, and the SI-DeviceNet supports several of these pre-defined assembly objects. The format of the DeviceNet pre-defined assembly objects is fixed.

Table 10.1 Pre-defined SI-DeviceNet assembly objects

Object	Type	Object name
20 (0x14)	Output	Basic speed control output
21 (0x15)	Output	Extended speed control output
22 (0x16)	Output	Speed and torque control output
23 (0x17)	Output	Extended speed and torque control output
70 (0x46)	Input	Basic speed feedback
71 (0x47)	Input	Extended speed feedback
72 (0x48)	Input	Basic speed and torque feedback
73 (0x49)	Input	Extended speed and torque feedback

To select a pre-defined input or output assembly object:

1. Specify the input assembly object required in Pr **S.01.018**.
2. Specify the output assembly object required in Pr **S.01.019**.
3. Set Pr **MM.007** to On to reset the SI-DeviceNet, and make the changes take effect.

NOTE The parameter mapping of the pre-defined DeviceNet objects CANNOT be changed.

10.1.1 Basic speed control

Output assembly object 20

The scanner must be configured for 4 Tx bytes (or 2 Tx words) if this output assembly object is selected.

Table 10.2 Basic speed control

Data word	Function
Word 0	Basic control word (See below)
Word 1	SpeedRef (See status word)

The basic control word uses a full 16-bit word, with the bits having functions as shown below.

b15	b14	b13	b12	b11	b10	b9	b8

b7	b6	b5	b4	b3	b2	b1	b0
					FaultRst		RunFwd

10.1.2 Extended speed control

Output assembly object 21

The scanner must be configured for 4 Tx bytes (or 2 Tx words) if this output assembly object is selected.

Table 10.3 Extended speed control

Data word	Function
Word 0	Extended control word (see below).
Word 1	SpeedRef (see status word).

The extended control word uses a full 16-bit word, with the bits having functions as shown below.

b15	b14	b13	b12	b11	b10	b9	b8

b7	b6	b5	b4	b3	b2	b1	b0
	NetRef	NetCtrl			FaultRst	RunRev	RunFwd

10.1.3 Basic speed and torque control

Output assembly object 22

The scanner must be configured for 6 Tx bytes (or 3 Tx words) if this output assembly object is selected.

Table 10.4 Basic speed and torque control

Data Word	Function
Word 0	Basic control word (See below)
Word 1	SpeedRef (See status word)
Word 2	TorqueRef (See status word)

The basic control word uses a full 16-bit word, with the bits having functions as shown below.

b15	b14	b13	b12	b11	b10	b9	b8

b7	b6	b5	b4	b3	b2	b1	b0
					FaultRst		RunFwd

10.1.4 Extended speed and torque control

Output assembly object 23

The scanner must be configured for 6 Tx bytes (or 3 Tx words) if this output assembly object is selected.

Table 10.5 Extended speed and torque control

Data word	Function
Word 0	Extended control word (See below)
Word 1	SpeedRef (See status word)
Word 2	TorqueRef (See status word)

The extended control word uses a full 16-bit word, with the bits having functions as shown below.

b15	b14	b13	b12	b11	b10	b9	b8

b7	b6	b5	b4	b3	b2	b1	b0
	NetRef	NetCtrl			FaultRst	RunRev	RunFwd

10.1.5 Basic speed feedback

Input assembly object 70

The scanner must be configured for 4 Rx bytes (or 2 Rx words) if this input assembly object is selected.

Table 10.6 Basic speed feedback

Data word	Function
Word 0	Basic status word (See below)
Word 1	SpeedActual (See status word)

The basic status word uses a full 16-bit word, with the bits having functions as shown below.

b15	b14	b13	b12	b11	b10	b9	b8

b7	b6	b5	b4	b3	b2	b1	b0
					Running1		Faulted

10.1.6 Extended speed feedback

Input assembly object 71

The scanner must be configured for 4 Rx bytes (or 2 Rx words) if this input assembly object is selected.

Table 10.7 Extended speed feedback

Data word	Function
Word 0	Basic status word (see below)
Word 1	SpeedActual (see status word)

The basic status word uses a full 16-bit word, with the bits having functions as shown below.

b15	b14	b13	b12	b11	b10	b9	b8
DriveState							

b7	b6	b5	b4	b3	b2	b1	b0
At Reference	RefFrom Net	CtrlFrom Net	Ready	Running2	Running1	Warning	Faulted

10.1.7 Basic speed and torque feedback

Input assembly object 72

The scanner must be configured for 6 Rx bytes (or 3 Rx words) if this input assembly object is selected'.

Table 10.8 Basic speed and torque feedback

Data word	Function
Word 0	Basic status word (see below)
Word 1	SpeedActual (see status word)
Word 2	TorqueActual (see status word)

The extended status word uses a full 16-bit word, with the bits having functions as shown below.

b15	b14	b13	b12	b11	b10	b9	b8

b7	b6	b5	b4	b3	b2	b1	b0
					Running1		Faulted

10.1.8 Extended speed and torque feedback

Input assembly object 73

The scanner must be configured for 6 Rx bytes (or 3 Rx words) if this input assembly object is selected.

Table 10.9 Extended speed and torque feedback

Data word	Function
Word 0	Basic status word (See below)
Word 1	SpeedActual (See status word)
Word 2	TorqueActual (See status word)

The extended status word uses a full 16-bit word, with the bits having functions as shown below.

b15	b14	b13	b12	b11	b10	b9	b8
DriveState							

b7	b6	b5	b4	b3	b2	b1	b0
At Reference	RefFrom Net	CtrlFrom Net	Ready	Running2	Running1	Warning	Faulted

11 DeviceNet Objects

The Object Model has the following object classes present.

Table 11-1 Supported Objects

Object Class	Class Code	No. of instances	Effect on behaviour
Identity	1 (0x01)	1	Supports the device reset service
Message Router	2 (0x02)		Internally routes messages
DeviceNet	3 (0x03)		Configures device attributes
Assembly	4 (0x04)	64	Defines I/O data format, i.e parameter mapping
Connection	5 (0x05)	2	Logic ports into or out of the drive
Motor Data	40 (0x28)	2	Defines the motor data
Control Supervisor	41 (0x29)	1	Manages drive functions, operational states and control
AC/DC Drive	42 (0x2A)		Provides drive configuration
CT Group	100 (0x64)	<No. of menus>	Provides an interface to all drive parameters Be aware that menu 200 is used to access menu 0(Setup menu)
CT Local slot	101 (0x65)		Provides a shortcut to access the local slot parameters Be aware that menu 200 is used to access menu 0(Setup menu)
CT Slot 1-4	102 (0x66) - 105 (0x69)		Provides an interface to option slot 1-4 parameters Be aware that menu 200 is used to access menu 0(Setup menu)

11.1 Identity Object

Class: 0x01 (1)

This object provides identification of and general information about the device.

11.1.1 VendorID

Name:	VendorID		
Class	0x01	**Default**	257
Instance	0x01	**Data Type**	UINT
Attribute	0x01	**Access**	Get

Returns the Vendor ID code, which is 0x101 (257) for Control Techniques.

11.1.2 DeviceType

Name:	DeviceType		
Class	0x01	**Default**	2
Instance	0x01	**Data Type**	UINT
Attribute	0x02	**Access**	Get

Returns the Device Type code.

11.1.3 ProductCode

Name:	ProductCode		
Class	0x01	**Default**	See below
Instance	0x01	**Data Type**	UINT
Attribute	0x03	**Access**	Get

Identifies the current drive configuration, and is used to link a node to the installed EDS files. ProductCode is calculated as shown below.

Table 11-2 Generic ProductCode

b15	b14	b13	b12	b11	b10	b9	b8	b7	b6	b5	b4	b3	b2	b1	b0
0			Drive Type		Variant Pr **11.028**					Drive Mode (Pr **11.084**) - 1			0		

Drive Type returns the code for the product (i.e. the drive). This is 2 for Unidrive M600 to M810, and 3 for Unidrive M100 to 400.

Pr **11.028** returns the drive derivative number.

Pr **11.084** returns the drive operating mode, e.g. Open-loop = 1, RFC-A = 2, RFC-S = 3, Regen = 4, etc.

In advanced mode, ProductCode is calculated as shown below.

Table 11-3 Advanced ProductCode

b15	b14	b13	b12	b11	b10	b9	b8	b7	b6	b5	b4	b3	b2	b1	b0
Product			((Pr **11.029**/100) * 3) + Local Slot				Pr **11.084**			Slot X			Slot Y		

Pr **11.029** returns the major software revision number.

Local Slot indicates the slot in which the SI-DeviceNet is installed: 0 = slot 1, 1 = slot 2, 2 = slot 3.

Pr **11.084** returns the drive operating mode, e.g. open loop, closed loop, servo, etc.

Slot X indicates the family of installed in the lowest numbered slot, excluding the slot where this SI-DeviceNet is installed. Slot X = Pr **MM.001**/100.

Slot Y indicates the family of installed in the highest numbered slot, excluding the slot where this SI-DeviceNet is installed. Slot Y = Pr **MM.001**/100.

11.1.4 Revision

Name:	Revision		
Class	0x01	**Default**	N/A
Instance	0x01	**Data Type**	ARRAY of USINT
Attribute	0x04	**Access**	Get

Identifies the revision of the drive. Revision is calculated as shown below.

b15	**b14**	**b13**	**b12**	**b11**	**b10**	**b9**	**b8**	**b7**	**b6**	**b5**	**b4**	**b3**	**b2**	**b1**	**b0**
((Pr **11.029** mod 1000000) / 10000 +1)								**0**	**127**						

11.1.5 SerialNumber

Name:	SerialNumber		
Class	0x01	**Default**	N/A
Instance	0x01	**Data Type**	UDINT
Attribute	0x06	**Access**	Get

Returns a serial number of the SI-DeviceNet. This value is entered during production, and cannot be edited. The serial number of the SI-DeviceNet can also be read from Pr **MM.004** and Pr **MM.005**.

11.1.6 ProductName

Name:	ProductName		
Class	0x01	**Default**	SM DeviceNet
Instance	0x01	**Data Type**	SHORT_STRING
Attribute	0x07	**Access**	Get

Returns a short string to indicate the Product Name. The SI-DeviceNet returns the string “SI DeviceNet”.

11.2 SI-DeviceNet Object

Class: 0x03 (3)

The DeviceNet Object provides the configuration and status of the SI-DeviceNet port.

11.2.1 MAC-ID

Name:	MAC-ID		
Class	0x03	**Default**	63
Instance	0x01	**Data Type**	USINT
Attribute	0x01	**Access**	Get/Set

The MAC-ID is read from Pr **S.01.004** at power up and reset. When this attribute is written to, the SI-DeviceNet will update the MAC-ID in Pr **S.01.004** and reset, causing the new value to take effect immediately.

11.2.2 DataRate

Name:	DataRate		
Class	0x03	**Default**	0
Instance	0x01	**Data Type**	USINT
Attribute	0x02	**Access**	Get/Set

The Data Rate is read from Pr **S.01.007** at power up and reset. When this attribute is written to, the SI-DeviceNet will update the Data Rate in Pr **S.01.007**. The new value is not stored automatically, and the SI-DeviceNet is not reset.

Table 11-4 shows the attribute values for each data rate.

Table 11-4 DeviceNet data rate

Setting	bits/sec
0	125K
1	250K
2	500K

11.2.3 AllocationByte

Name:	AllocationByte		
Class	0x03	**Default**	0
Instance	0x01	**Data Type**	USINT
Attribute	0x05	**Access**	Get

Returns 2 bytes of information. The low byte contains the Allocation Byte, with each bit assigned as shown in the table below.

The high byte indicates the MAC-ID of the master device which allocated the Master/Slave pre-defined connection set. A value of 255 means the pre-defined Master/Slave connection set has not yet been allocated.

Table 11-5 Allocation byte

Bit	Action
0	Explicit Message
1	Polled
2	Strobed (Not supported)
3	Reserved

Bit	Action
4	Change of State (Not supported)
5	Cyclic (Not supported)
6	Acknowledge Suppression
7	Reserved

11.3 Motor Data Object

Class: 0x28 (40)

11.3.1 MotorType

Name:	MotorType1		
Class	0x28	**Default**	7
Instance	0x01	**Data Type**	USINT
Attribute	0x03	**Access**	Get/Set

Name:	MotorType2		
Class	0x28	**Default**	7
Instance	0x02	**Data Type**	USINT
Attribute	0x03	**Access**	Get/Set

There are 2 instances of the Motor Data object. Instance 1 will represent the Menu 5 motor information (Motor Map 1) and instance 2 will represent the menu 21 motor map (Motor Map 2). The instance being used by the other dependant DeviceNet objects will be determined by Pr **21.015**. Pr **21.015** is polled in the background task, so the user should be aware that during motor map changeover, the rpm speed reference might not be accurate.

MotorType1 is linked directly to Pr **S.01.040**, and MotorType2 is linked directly to Pr **S.01.041**.

Table 11-6 Supported motor types

Pr **S.01.040**, Pr **S.01.041**	**Motor Type**
2	Field Controlled DC Motor
6	Wound Rotor Induction motor
7	Squirrel Cage Induction Motor (default)
9	Sinusoidal PM BL motor
10	Trapezoidal PM BL motor

11.3.2 RatedCurrent

Name:	RatedCurrent1		
Class	0x28	**Default**	Pr **05.007**
Instance	0x01	**Data Type**	USINT
Attribute	0x06	**Access**	Get/Set

Name:	RatedCurrent2		
Class	0x28	**Default**	Pr **21.007**
Instance	0x02	**Data Type**	USINT
Attribute	0x06	**Access**	Get/Set

Specifies the rated current of the motor in Amps. Instance 1 is mapped to Pr **05.007** in the drive, while instance 2 is mapped to Pr **21.007**.

Set Pr **05.007** = RatedCurrent1 * 10

Get RatedCurrent1 = Pr **0.507** / 10

Set Pr **21.007** = RatedCurrent2 * 10

Get RatedCurrent2 = Pr **21.007** / 10

11.3.3 RatedVoltage

Name:	RatedVoltage1		
Class	0x28	**Default**	Pr **05.009**
Instance	0x01	**Data Type**	USINT
Attribute	0x07	**Access**	Get/Set

Name:	RatedVoltage2		
Class	0x28	**Default**	Pr **21.009**
Instance	0x02	**Data Type**	USINT
Attribute	0x07	**Access**	Get/Set

Specifies the rated motor voltage in Volts. Instance 1 is mapped directly to Pr **05.009** in the **drive**, and instance 2 is mapped directly to Pr **21.009**.

11.3.4 RatedFreq

Name:	RatedFreq1		
Class	0x28	**Default**	
Instance	0x01	**Data Type**	USINT
Attribute	0x09	**Access**	Get/Set

Name:	RatedFreq2		
Class	0x28	**Default**	
Instance	0x02	**Data Type**	USINT
Attribute	0x09	**Access**	Get/Set

Specifies the rated motor frequency in Hertz. Instance 1 is linked to Pr **05.006** in the Unidrive M and instance 2 is linked to Pr **21.006**.

Set Pr **05.006** = RatedFreq1 * 10

Get RatedFreq1 = Pr **05.006** / 10

Set Pr **21.006** = RatedFreq2 * 10

Get RatedFreq2 = Pr **21.006** / 10

11.3.5 BaseSpeed

Name:	BaseSpeed1		
Class	0x28	Default	Pr **05.008**
Instance	0x01	Data Type	USINT
Attribute	0x0F	Access	Get/Set

Name:	BaseSpeed2		
Class	0x28	Default	Pr **21.008**
Instance	0x02	Data Type	USINT
Attribute	0x0F	Access	Get/Set

Specifies the base speed of the motor in rpm. Instance 1 is mapped directly to Pr **05.008** in the drive, and instance 2 is mapped directly to Pr **21.008**.

11.3.6 Motor2Select

Name:	Motor2Select		
Class	0x28	Default	
Instance	0x01	Data Type	USINT
Attribute	0x64	Access	Get/Set

Selects between Motor Map 1 and Motor Map 2 in the drive.

Set Pr **11.045**

Get Pr **21.015**

11.4 Control Supervisor

Class: 0x29 (41)

11.4.1 RunFwd

Name:	RunFwd		
Class	0x29	Default	
Instance	0x01	Data Type	USINT
Attribute	0x03	Access	Get/Set

Set to 1 to run the drive in the forward direction.

Get/Set Pr **06.042** bit 1

11.4.2 RunRev

Name:	RunRev		
Class	0x29	Default	
Instance	0x01	Data Type	USINT
Attribute	0x04	Access	Get/Set

Set to 1 to run the drive in the reverse direction.

Get/Set Pr **06.042** bit 3

11.4.3 NetCtrl

Name:	NetCtrl		
Class	0x29	Default	
Instance	0x01	Data Type	USINT
Attribute	0x05	Access	Get/Set

Switches the drive between terminal and fieldbus control.

Get/Set Pr **06.042** bit 7

Set False terminal control

Set True fieldbus control

11.4.4 State

Name:	State		
Class	0x29	Default	N/A
Instance	0x01	Data Type	USINT
Attribute	0x05	Access	Get

This returns a code to indicate the current operating state of the drive.

Table 11-7 Device state

State	DeviceNet state	Drive state
1	Startup	This state is skipped on
2	Not_Ready	Inhibit
3	Ready	Ready
4	Enabled	Run or Stop (stop is only enabled by default in Servo mode)
5	Stopping	Deceleration or Injection
6	Fault_Stop	AC_UU (this will only occur if Mains Loss is enabled)
7	Faulted	Tripped
0	Vendor Specific	All other drive states, e.g. Scan, Orienting, Regen Active, etc.

11.4.5 RunningFwd

Name:	RunningFwd		
Class	0x29	Default	
Instance	0x01	Data Type	USINT
Attribute	0x07	Access	Get

Indicates that the drive is running in the forward direction.

Get True (Pr **10.040** & 0x2002) == 0x0002

Get False (Pr **10.040** & 0x2002) != 0x0002

11.4.6 RunningRev

Name:	RunningRev		
Class	0x29	Default	
Instance	0x01	Data Type	USINT
Attribute	0x08	Access	Get

Indicates that the drive is running in the reverse direction.

Get True (Pr **10.040** & 0x2002) == 0x2002

Get False (Pr **10.040** & 0x2002) != 0x2002

11.4.7 Faulted

Name:	Faulted		
Class	0x29	Default	
Instance	0x01	Data Type	USINT
Attribute	0x0A	Access	Get

Indicates that the drive is tripped, i.e. not OK

Get Pr **10.001**

11.4.8 FaultRst

Name:	FaultRst		
Class	0x29	Default	
Instance	0x01	Data Type	USINT
Attribute	0x0C	Access	Set

Resets the drive from a tripped condition.

Set True Pr **10.038** = 100

Set False No action

11.4.9 FaultCode

Name:	FaultRst		
Class	0x29	Default	N/A
Instance	0x01	Data Type	USINT
Attribute	0x0D	Access	Set

If the drive is tripped, the fault code is obtained from parameter Pr **10.020** in the drive. If the fault code in Pr **10.020** is one of the following, the table gives the appropriate ODVA code, otherwise the error code will be returned as 0x1000 + Pr **10.020**.

Fault codes

Drive fault code	ODVA fault code
2	0x3210
3	0x2300
4	0x7112
6	0x9000
20	0x2310
21	0x4300
26	0x5112
32	0x3130

11.4.10 CtrlFromNet

Name:	CtrlFromNet		
Class	0x29	Default	
Instance	0x01	Data Type	USINT
Attribute	0x0F	Access	Get

Indicates that the drive is operating under fieldbus control.

Get Pr **06.042** bit 7 & Pr **06.043**

11.4.11 DriveEnable

Name:	DriveEnable		
Class	0x29	Default	
Instance	0x01	Data Type	USINT
Attribute	0x0F	Access	Get/Set

Enables the drive. This puts the Drive into the “Ready” state, allowing the RunFwd and RunRev attributes to control the drive. RunFwd and RunRev will have no effect if DriveEnable is not set to 1.

Get/Set Pr **06.042** bit 0

NOTE The external hardware enable signal must also be present before the drive will go to the Ready state.

11.5 AC/DC Drive Object

Class: 0x2A (42)

11.5.1 AtReference

Name:	AtReference		
Class	0x2A	Default	
Instance	0x01	Data Type	USINT
Attribute	0x03	Access	Get

Indicates that the drive is running at the requested speed.

Get Pr **10.006**

11.5.2 NetRef

Name:	NetRef		
Class	0x2A	Default	
Instance	0x01	Data Type	USINT
Attribute	0x04	Access	Get/Set

Selects the source of the speed reference. Analog input 1 is used as the speed reference when running under local control, with Digital Speed Reference 1 being used as the speed reference for network control.

Get/Set Pr **06.042** bit 8

Set False analog speed reference

Set True digital speed reference

The reference can only be changed between local and remote when the drive is configured in speed control mode. If a change is requested when in torque mode then a ‘Device state conflict’ error code 10h will be returned.

11.5.3 DriveMode

Name:	DriveMode		
Class	0x2A	Default	
Instance	0x01	Data Type	USINT
Attribute	0x06	Access	Get/Set

DriveMode does not allow the operating mode of the drive to be changed. Pr **04.011** will be written to as shown in Table 11-9, provided that the drive is already in the correct operating mode.

Table 11-8 Get DriveMode

DriveMode	Drive Mode	Pr 11.031	Pr 04.011
1	Open Loop Speed	0, 1	0
2	Closed Loop Speed	2, 3	0
3	Torque Control	N/A	1
0	User Defined	4	0

Table 11-9 Set DriveMode

DriveMode	Drive Mode	Pr 11.031	Pr 04.011	Comment
0	Vendor Specific	4	N/A	Pr **11.031** will never be changed by setting the DriveMode attribute. An error (0x10) will be generated if the requested DriveMode value corresponds to the current drive operating mode.
1	Open Loop Speed	0, 1	0	
2	Closed Loop Speed	2, 3	0	
3	Torque Control	0, 1, 2, 3	1	
4	Process Control	N/A		
5	Position Control	N/A		

11.5.4 SpeedActual

Name:	SpeedActual		
Class	0x2A	Default	
Instance	0x01	Data Type	USINT
Attribute	0x07	Access	Get

Returns the actual speed of the motor in RPM. The source of the motor speed depends on the operating mode of the drive.

Get Pr **05.004** (Open Loop)

Get Pr **03.002** (Closed Loop, Servo)

11.5.5 SpeedRef

Name:	SpeedRef		
Class	0x2A	Default	
Instance	0x01	Data Type	USINT
Attribute	0x08	Access	Get/Set

Sets the speed reference in RPM. As the drive uses units of Hz for speed, these values are converted when reading from or writing to this attribute.

Set Pr **01.021** = (RPM * Pole Pairs) / 6 (Open Loop)

Get RPM = (Pr **02.001** * 6) / Pole Pairs (Open Loop)

Get/Set Pr **01.021** * 10 (Closed Loop, Servo)

11.5.6 TorqueActual

Name:	TorqueActual		
Class	0x2A	Default	
Instance	0x01	Data Type	USINT
Attribute	0x0B	Access	Get

Returns the actual load on the motor as a percentage of the rated motor load. This attribute has 1 decimal place fixed precision, so a value of 1000 represents 100.0 % load.

Get Pr **04.020**

11.5.7 TorqueRef

Name:	TorqueRef		
Class	0x2A	Default	
Instance	0x01	Data Type	USINT
Attribute	0x0C	Access	Get/Set

Sets the load (torque) reference as % of rated motor load (torque). This attribute has 1 decimal place fixed precision, so a value of 1000 represents 100.0 % load.

Set Pr **04.008** = TorqueRef / 10

Get Torque Ref = Pr **04.008** * 10

11.5.8 RefFromNet

Name:	RefFromNet		
Class	0x2A	Default	
Instance	0x01	Data Type	USINT
Attribute	0x0C	Access	Get

Indicates the source of the speed reference.

TRUE if Pr **01.049** = 3 and Pr **01.050** = 1

FALSE otherwise.

11.6 Control Techniques Object

Class code: 0x64 (100)

The Control Techniques object provides access to all drive parameters. For example, parameter Pr **04.020** would be accessed as Class 100, Instance 4, Attribute 20.

Table 11-10 Supported objects

Instance	Menu	Name
1 (0x01)	1	Speed reference.
2 (0x02)	2	Ramp control.
3 (0x03)	3	Speed control.
4 (0x04)	4	Current control.
5 (0x05)	5	Motor control.
6 (0x06)	6	Sequencing.
7 (0x07)	7	Analog I/O.
8 (0x08)	8	Digital I/O.
9 (0x09)	9	Logic.
10 (0x0A)	10	Drive status.
11 (0x0B)	11	Drive set-up.
12 (0x0C)	12	Programmable thresholds.
13 (0x0D)	13	Position control.
14 (0x0E)	14	Process PID loop.
15 (0x0F)	15	Slot 1 configuration.
16 (0x10)	16	Slot 2 configuration.
17 (0x11)	17	Slot 3 configuration.
18 (0x12)	18	User application menu 1.
19 (0x13)	19	User application menu 2 (not on M100-M400).
20 (0x14)	20	User application menu 3 (not on M100-M400).
21 (0x15)	21	Second motor map.
200	0	Menu 0.

12 Diagnostics

12.1 Overview

This section provides basic diagnostic information intended to resolve the most common problems encountered when setting up an SI-DeviceNet module on a DeviceNet network.

A high percentage of problems reported are basic set-up problems which can usually be solved by reading the information in this chapter. If after reading this chapter you are still experiencing problems, please contact your supplier for support.

12.1.1 Drive trip display codes

If the option module detects an error during operation, it will force a trip on the drive. However, the trip string displayed on the drive will only indicate which slot initiated the trip. The exact reason for the trip will be indicated in the drive trip code parameters (Pr **10.020** and Pr **10.070**).

Table 12-1 shows the possible trips that will be displayed on the drive when a problem is detected with the option module or when the option module initiates a trip.

Table 12-1 Drive trip display codes

Trip	Description
SlotX HF	The drive has detected that an option module is present but is unable to communicate with it due to a hardware fault.
SlotX Error	User trip generated by the option module
SlotX Not Fitted	This trip will occur if a drive slot was previously configured with an option module but on power up, no option module was detected.
SlotX Different	This trip will occur if a drive slot was previously configured with an option module but on power up, a different option module was detected. Replacing the option module with another one of the same ID number will not initiate this trip. The trip will also occur if an option module is installed to a previously unused slot.

12.1.2 Module error codes

If the option module detects an internal error during operation, it will force a trip on the drive and provide a sub-trip string for a clearer definition of the trip. The table below shows the possible module error codes.

Table 12-2 Module error codes

Value	Text	Description
200	SW fault	Software fault
201	BG Orun	Background task overrun
202	FW invalid	Invalid firmware for hardware version
203	Drv unknown	Unknown drive type
204	Drv unsupported	Unsupported drive type
205	Mode unknown	Unknown mode
206	Mode unsupported	Unsupported mode
207	FLASH corrupt	Corrupted Non-volatile Flash
208	Dbase init	Database initialization error
209	FS init	File system initialization error
210	Memory alloc	Memory allocation error
211	Filesystem	File system error
212	Configuration	Configuration file error
213	OHt	Overheated
214	TO drv	The drive has not responded with the watchdog period
215	eCMP	eCMP comms failure
216	TO eCMP slot 1	Slot 1 eCMP timeout
217	TO eCMP slot 2	Slot 2 eCMP timeout
218	TO eCMP slot 3	Slot 3 eCMP timeout
219	TO eCMP slot 4	Slot 4 eCMP timeout
220	Fact Setting	Missing factory setting
221	Config Load	Error loading saved configuration file
222	RT Config	Failed to update parameter after drive mode being changed
223	Read Par	Failed to read parameter during cyclic communication
224	Write Par	Failed to write parameter during cyclic communication

12.1.3 DeviceNet error codes

If the SI-DeviceNet module detects a DeviceNet error during operation, it will force a trip on the drive and provide a sub-trip string for a clearer definition of the trip. The table below shows all possible SI-DeviceNet error codes.

Table 12-3 DeviceNet network error codes

Value	Text	Description
0	No trip	No trip
100	Link Loss	The link to the network has been lost
101	Bus Off	The CAN layer of the module has entered the Bus Off state

12.1.4 SI-DeviceNet network diagnostic

The operating status of the SI-DeviceNet module can be viewed in the network diagnostic parameter (Pr **S.01.006**). All possible values of this parameter are described in Table 12-4.

Table 12-4 SI-DeviceNet network operating status

Value	Text	Description
0	Network OK	Network ok/healthy
1	Init OK	The SI-DeviceNet has initialized correctly and is waiting for the DeviceNet master to initialize communications.
2	No Cyclic	No cyclic data has been recognized. This could be due to the length of the mapping data is not equal to the master setup.
3	Init Failed	A part of the SI-DeviceNet initialization sequence was not successful. If this fault persists after a power-cycle, replace the SI-DeviceNet.
4	Comm Fault	Fault found in the communications of the module. This could be due to different devices being configured to use different baud rates.
5	No 24 V	No 24 V external PSU has been detected.
6	Baud detecting	Automatic baud rate detection is in progress.
7	Initializing	The module is currently initializing.

12.1.5 Mapping Status

If the DeviceNet Network Diagnostic parameter (Pr **S.01.006**) indicates "Init Failed", a mapping configuration error has been could have been detected. The reason for the error is indicated by the SI-DeviceNet input mapping status parameter (Pr **S.01.022**) and the SI-DeviceNet output mapping status parameter (Pr **S.01.023**).

When a mapping error has been corrected, reset the SI-DeviceNet module by setting Pr**S.01.002** or MM.007 to On (1).

The mapping error codes are described in Table 12-5.

Table 12-5 Mapping error codes

Value	Text	Description
0	No error	No error has been detected during mapping initialisation
1	Par impossible	The parameter may not exist or may not be readable
2	Hole in mapping	Cyclic data mapping parameters are not contiguous
3	Dup mapping	Two or more cyclic data mapping configuration parameters have been configured with the same destination parameter reference
4	Length exceed	The length of the mapped parameters exceeds the length of the selected assembly object
5	Obj not support	The selected assembly object is not supported
6	Pre & uncompress	If the predefined object is selected, the data alignment must be set to 16 bits
7	Type unmatched	The IN and OUT objects both must be predefined objects, or neither
8	Memory fault	Failed to allocate memory for mapping
9	No mapping	No parameter is assigned to the mapping
10	Reserved	Reserved

12.1.6 Alarms

If the SI-DeviceNet detects an alarm during operation, it will cause the drive to display the appropriate alarm on the drive keypad. If more than one alarm is present, it will be shown as “first-in-first-out” (FIFO) order.

Value	Text	Description
0	No alarm	No alarm.
1	User Prog	A user program alarm has been generated.
2	eCMP	An eCMP alarm has been generated.
3	FS Usage	A file system alarm has been generated.
4	Too Hot	Module temperature is too high.
5	In Mapping	Error with Input mapping setup.
6	Out Mapping	Error with Output mapping setup.
7	Fbus Init	Fieldbus Initialization failed, possibly due to external 24 V missing or baud rate detection failed.
8	Read Err	Error during reading from a mapped parameter.
9	Write Err	Error during writing to a mapped parameter.

13 Glossary Of Terms

Address: This is the unique network identification given to a networked device to allow communication on a network. When a device sends or receives data the address is used to determine the source and the destination of the message.

Alignment: By default SI-DeviceNet transmits values as 32 bits on the network. It is possible by using alignment to reduce the number of bits transmitted when sending 16-bit (or smaller) values on the network to 16-bit (32-bit values will still be transmitted as 32-bit values). This has the advantage of reducing the volume of traffic on the network and allowing more parameters to be mapped within SI-DeviceNet.

Bit: A binary digit, this may have the value of 1 or 0.

Byte: A collection of 8 binary digits that collectively store a value. This may be signed or unsigned.

CAN: The base network used for DeviceNet. The DeviceNet module does not support CAN commands.

DeviceNet: Builds on the basic CAN protocol by offering higher level functionality.

Casting: The process of changing between data sizes without changing the value represented, e.g. changing from 16-bit to 32-bit.

Consistency: Describes how data is transmitted between nodes on the network. If data is consistent it is transmitted from node to node as a single entity. Thus preventing data corruption where multiple bytes are transmitted or received individually.

Control word: A collection of binary digits that are used to control the drive. Features typically include directional controls, run controls and other similar functions.

Cyclic data: This consists of values that are sent at regular or cyclic intervals across the network. A typical use of cyclic data would be the transmission of a speed reference or a control word.

Data format: Determines the quantity and function of the data sent and received across the network.

Data rate: Determines the communication speed of the network, the higher the value the more data can be sent across the network in the same time period.

Device: A piece of equipment connected to a network, this may be any type of equipment including repeaters, hubs, masters or slaves.

Double word: A 32-bit word, this may be signed or unsigned.

Earthing/Grounding: Describes the electrical safety or shielding connections for the module.

Event task: A special way to use a message or change of state to trigger a software routine.

IN data: Data that is returned from a slave device to the DeviceNet master.

Long word: A 32-bit data word that may be signed or unsigned.

Mapping: The process of linking DeviceNet values to parameters within the drive.

Master: The controlling device on the network, generally this will include programming features.

Network Loss Trip: A method to determine when a node has lost contact with the master.

Node: A device on the network. This may be either a device such as a drive or part of the network such as a repeater.

Non-Cyclic Data: Data that is requested or sent by the master as required. This is not sent on a regular basis and generally allows access to any parameter. This is useful for occasional changes or configuration purposes.

Object Dictionary: A collection of the objects that are supported by the product.

Poll rate: The rate at which cyclic data is sent and received on the network.

Response ID: The response code of the message received when using PPO4 word non-cyclic communication.

Scan rate: See Poll rate in this section.

Shielding: A connection to provide additional immunity to noise used on a network cable.

Segment: An electrically separate part of the network. Each segment requires correct termination to ensure reliable operation. Due to electrical limitations the maximum number of devices on a segment is limited to 32.

Slave: A device on the DeviceNet network such as a drive or sensor. A slave device will only respond to messages from a master.

Status word: A value that denotes the status of the drive. Each bit within the word will have a specific meaning.

Task ID: The code used to describe the purpose of a message using PPO 4 word non-cyclic communication.

Termination: This is used at both ends of a network segment to prevent reflections and reduce noise.

Watchdog: A method used to determine if a communication system is ok/healthy. A typical watchdog scheme uses a handshaking system to check both the master and slave are participating in communications.

Word: A collection of 16 binary digits.

Index

A

Above set speed 53
At speed 52

B

Back-up power supply 11
Below set speed 52

C

Cable 18
Cautions 6
Conformance certificate 12
Control and status words 50
Control Techniques Object 71
Control word 50
Control word bit functions 51
Current limit 53
Cyclic data 49

D

DeviceNet cable 18
DeviceNet ground point 20
DeviceNet network termination 19
Drive active 52
Dynamic brake active 53

E

Electrical installation 17
Electrical safety 6
Explicit parameter access 49
External power supply 18
External supply 17

G

General installation 14
General specification 11
Generic EDS files 54
Getting started 21
Glossary of terms 76

H

Hardware enable 50

M

Maximum network length 20
Minimum node to node cable length 20
Module menu 0 - Module Information 30
Module menu 1 - DeviceNet Setup 33
Module menu 2 45
Module menu 3 46
Module menu 4 47

O
Option Module identification 12

P
Polled words 39

Q
Quick start chart SI-DeviceNet 22

R
Regenerating 53
Running at or below minimum speed 52

S
SI-DeviceNet cable shield connections 19
SI-DeviceNet connections 18
SI-DeviceNet network loss trip 55
SI-DeviceNet terminal descriptions 17
Spurs 20
Status word 52

T
Termination 19

W
Warnings 6

Z
Zero speed 52

0478-0032-03