mayr®

your reliable partner

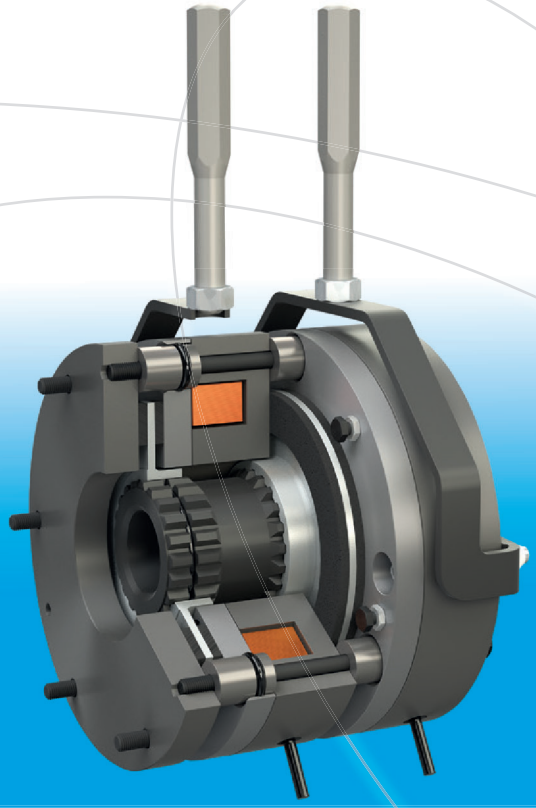

ROBA-stop®-silenzio®

K.896.V17.EN

www.mayr®.com



Expert know-how in development and design

As the technological leader, *mayr*® power transmission focuses on continuous further development. Today, highly qualified engineers and technicians work on tomorrow's innovations using the most up-to-date tools. The many years of experience and countless tests in the Development and Testing Department at the Mauerstetten Headquarters form the basis of conscientious lifetime dimensioning.

The values upheld by our traditional, family-run company also include long-term stability and independence as well as a good reputation and satisfied customers.

Therefore, we place emphasis on:

- Tested product quality,
- Optimum customer service,
- Comprehensive know-how,
- Global presence,
- Successful innovations and
- Effective cost management

Tested quality and reliability

mayr® brakes and clutches/couplings are subject to meticulous quality inspections. These include quality assurance measures during the design process as well as a comprehensive final inspection. Only the best, tested quality leaves our factory. All products are rigorously tested on calibrated test stands, and adjusted precisely to the requested values. An electronic database in which the measurement values are archived together with the associated serial numbers guarantees 100 % traceability. On request, we confirm the product characteristics with a test protocol.

The certification of our quality management according to DIN EN ISO 9001:2015 confirms the quality-consciousness of our colleagues at every level of the company.

Specialists in power transmission for more than a century

mayr® power transmission is one of the most traditional and yet most innovative companies in the field of power transmission. From modest beginnings in the year 1897, the family enterprise has developed to become the world market leader. Worldwide, the company employs approximately 1200 people.

An unsurpassed standard product range

mayr® power transmission offers an extensive variety of torque limiters, safety brakes, backlash-free shaft misalignment compensation couplings and high-quality DC drives. Numerous renowned machine manufacturers trust in solutions by *mayr*® power transmission.

Represented worldwide

With eight subsidiaries in Germany, sales offices in the USA, France, Great Britain, Italy, Singapore and Switzerland as well as 36 additional country representatives, *mayr*® is available in all important industrial areas, guaranteeing optimum customer service around the globe.

Never compromise on safety

We make no compromises where safety is concerned. Only top products of a perfect quality guarantee that no people are injured or machines damaged in case of malfunctions, collisions and other hazardous situations. The safety of your employees and machines is our motivation to always provide the best and most reliable clutches, couplings or brakes.

mayr® power transmission holds numerous ground-breaking patents, and is the global market or technological leader for

- application-optimised **safety brakes,** for example for passenger elevators, stage technology and gravity loaded axes
- **torque limiters** to protect against expensive overload damage and production losses and
- backlash-free **servo couplings**.

Strongly positioned

mayr® sets standards in power transmission with economically viable solutions. For maximum competitiveness of your machines and systems, we always aim for the best possible cost efficiency, starting with the development of your clutch/coupling or brake, right up to delivery of the finished and inspected product. For cost-efficient production, our factories in Poland and China represent the perfect supplement to the headquarters in Germany.



mayr® headquarters in Mauerstetten



Subsidiary with Production — *mayr*® China



Subsidiary with Production — *mayr*® Poland

mayr®
your reliable partner

ROBA-stop®-silenzio®

Reliable dual circuit brake in accordance with DGUV Rule 115-002 (previously BGV C1), DIN EN 17206, EN 81-20, EN 81-50 and other international standards



C US
LR 108927

Characteristics

- ***Dual circuit brake as redundant brake system with a very short construction length***
- ***Microswitch or proximity switch can be mounted for release monitoring***
- ***Simplest possible installation***
- ***No air gap adjustment necessary***
- ***Continuously low noise levels for several hundred thousand switchings***

The quietest safety brake

Due to a newly developed noise damping unit, the ROBA-stop®-silenzio® is the quietest safety brake on the market, even in its standard version (pages 6 to 9). In new condition, the noise level is < 50 dB(A) (sound pressure level measurement, AC-side switching). This value lies well below the noise level of the mounted drive elements such as e.g. motor and gearbox. Further noise reduction is possible. We can accord with your request as far as noise levels are concerned, and guarantee our performance with a legally binding inspection protocol.

High operational safety

The ROBA-stop®-silenzio® is available as a single circuit brake or as a dual circuit brake. On the dual circuit brake, two independently operating brake bodies ensure high operational safety. Certain variants of this brake type series fulfill the requirements acc. DGUV Rule 115-002 (previously BGV C1), DIN EN 17206, EN 81-20, EN 81-50 and can be designed according to the requirements stated in ASME A17.

Easy installation

The compact design as well as the single-part toothed hub ensure simple handling and installation. The working air gap is pre-set and needs no re-adjustment. Malfunctions due to operating and adjusting mistakes can be ruled out.

Optimised construction space

Due to a new design and the removal of the complicated intermediate flange plate, we have been able to create a uniquely short construction length.

Safe choice due to large type and size variety

12 construction sizes in different designs fulfil the demands for elevator and stage drives with a braking torque range of 2 x 3 Nm to 2 x 2150 Nm and therefore cover all required operation areas.

If the power is switched off or in case of power failure or EMERGENCY STOP, the brakes ensure reliable and secure holding in any position; therefore, the brakes are intended mostly for static application as holding brakes.

Duty cycle

The ROBA-stop®-silenzio® safety brakes are optimised for a relative duty cycle of 60 %. For a higher duty cycle, please contact the manufacturers. A duty cycle > 60 % can lead to higher temperatures, which may influence the noise and switching behaviour of the brake.

Brake monitoring for maximum safety

The ROBA-stop®-silenzio® safety brakes are configurable for comprehensive brake monitoring. They can guarantee maximum operational and functional safety due to the permanent monitoring of the brake condition and the optimisation of the friction system:

- Safe brake control
- Conditioning of the friction linings
- Refreshing of the friction linings
- Fail-safe release monitoring for checking the switching condition of the brake
- Wear inspection of the friction linings
- Monitoring and evaluation of the friction system temperature
- Static and dynamic braking torque tests

CERTIFICATE

Sizes 200 to 1800 with microswitch or proximity switch for release monitoring, after having consulted *mayr*®, are also available with EU Type Examination Certificate according to the Elevator Directive 2014/33/EU and the Reference Standards EN 81-20, EN 81-50.

ROBA-stop®-silenzio® Page 6

Sizes 4 to 1800

Permitted shaft diameter

8 to 100

Braking torques

2 x 3 to 2 x 2150 Nm
(Dual circuit brake)

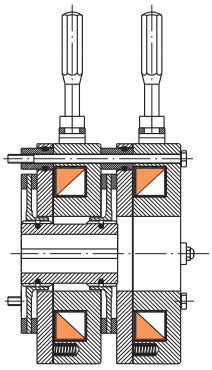

Type 896.0_ _.3_

Dual circuit brake
Redundant brake system with two independently working brake bodies

3 to 2150 Nm
(Single circuit brake)

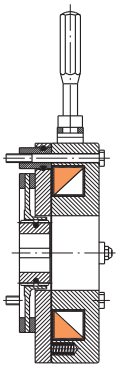

Type 896.1_ _.3_

Single circuit brake
Compact brake with an extremely short construction length

ROBA-stop®-silenzio® with double rotor design Page 10

Sizes 300 to 1800

Permitted shaft diameter

35 to 100

Braking torques

450 to 4300 Nm

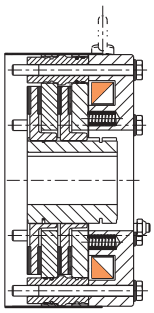

Type 896.2_ _.3_

Double rotor design
Single circuit brake with two rotors (4 friction surfaces) with doubled braking torque

In addition to the standard brakes, *mayr*® power transmission provides a multitude of further designs, which cannot be described in detail in this catalogue.
For further options, please see page 16.

Short Description Installation Page 12
Brake Dimensioning, Friction-Power Diagrams, Permitted Friction Work Page 13
Further Options Page 16
Switching Times Page 17
Electrical Connection Page 18
Contactless Release Monitoring Page 20
Electrical Accessories: DC Voltage Modules / Brake Control Module Page 21
Guidelines for Brakes with Type Examination Certificate Page 27

c UL us
E189728

On request ROBA-stop®-silenzio® brakes can also be delivered with UL approval.

ROBA-stop®-silenzio® Type 896.$^{0}_{1}$ _ _.3_ – Sizes 4 to 100

Noises < 50 dB(A) (Sound pressure level measurement, AC-side switching) at nominal braking torque

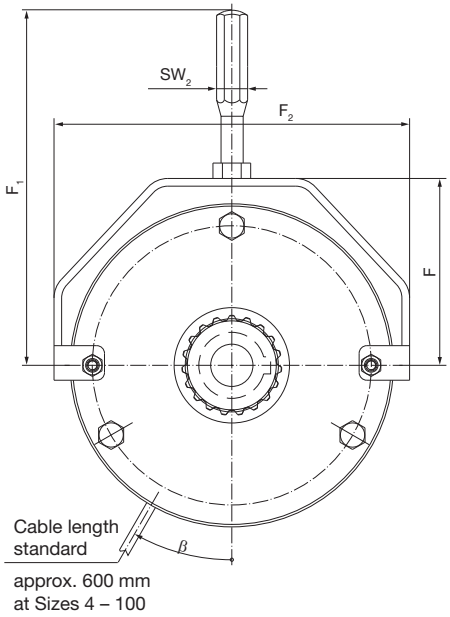

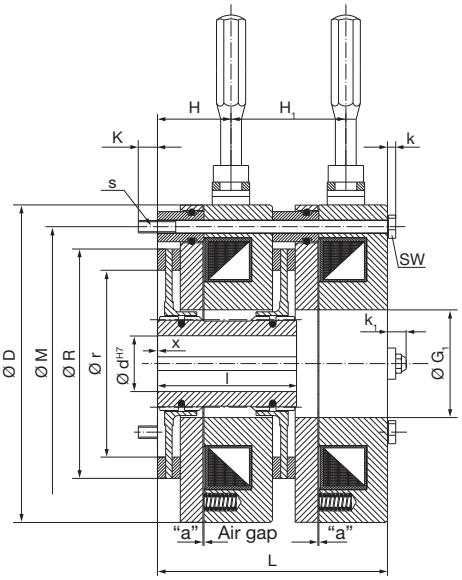

Type 896.001.30
(Dual circuit brake)

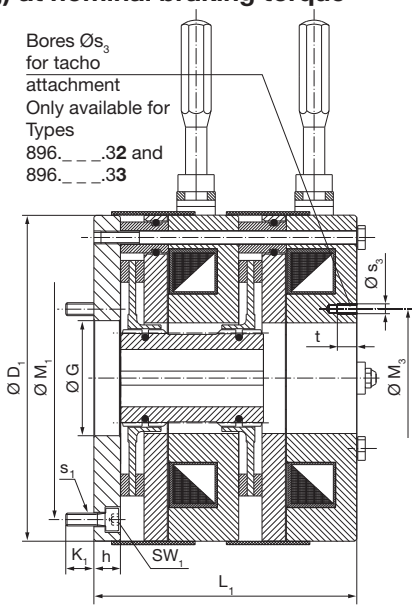

Type 896.005.33
(Dual circuit brake)

Technical Data				Sizes					
				4	8	16	32	64	100
Nominal braking torque [1) 2)]	Type 896.00_.3 _	M_N	[Nm]	2 x 4	2 x 8	2 x 16	2 x 32	2 x 64	2 x 100
	Type 896.10_.3 _	M_N	[Nm]	4	8	16	32	64	100
Electrical power	Type 896.00_.3 _	P_{20}	[W]	2 x 23	2 x 31	2 x 33	2 x 45	2 x 55	2 x 63
	Type 896.10_.3 _	P_{20}	[W]	23	31	33	45	55	63
Maximum speed [2)]		n_{max}	[rpm]	6000	5000	4000	3400	3000	2500
Maximum idle speed [3)]			[rpm]	10000	8000	8000	6000	6000	5000
Weight (pilot bored)	Type 896.000.3 _		[kg]	2 x 1.4	2 x 2.2	2 x 3.2	2 x 5.1	2 x 7.3	2 x 10.3
Nominal air gap		a	[mm]	0.45 ± 0.07	0.45 ± 0.07	0.5 ± 0.07	0.5 +0.04 -0.10	0.5 +0.04 -0.10	0.5 ± 0.07

Braking Torque Adjustment [Nm]

	Sizes					
	4	8	16	32	64	100
Dual circuit brake Type 896.0 _ _ .3 _						
100 %	2 x 4	2 x 8	2 x 16	2 x 32	2 x 64	2 x 100
120 %	2 x 5	2 x 10	2 x 19	2 x 40	2 x 77	2 x 120
75 %	2 x 3	2 x 6	2 x 12	2 x 26	2 x 43	2 x 80
Single circuit brake Type 896.1 _ _ .3 _						
100 %	4	8	16	32	64	100
120 %	5	10	19	40	77	120
75 %	3	6	12	26	43	80

Type 896.101.30
(Single circuit brake)

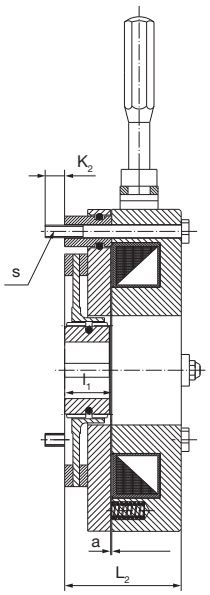

Type 896.105.33
(Single circuit brake)

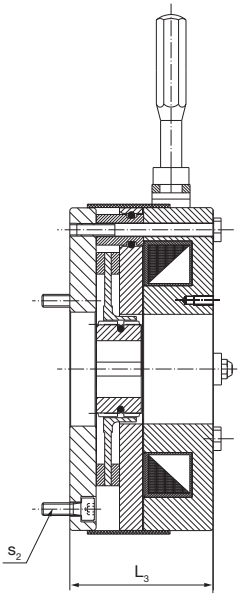

Graduation of the Nominal Braking Torque [%]

			Sizes					
			4	8	16	32	64	100
Dynamic braking torque in % of the nominal braking torque M_N		[%]	100	100	100	100	100	100
	up to speed	[rpm]	4500	3500	2900	2500	2500	2250
		[%]	85	85	85	85	-	-
	up to speed	[rpm]	5200	4200	3400	2900	-	-
		[%]	70	70	70	70	80	80
	up to speed	[rpm]	6000	5000	4000	3400	3000	2500

Example: Single circuit brake Type 896.10_.3 _, Size 100, speed = 2500 rpm;
Dynamic braking torque = 80 % x 100 Nm = 80 Nm

At the start of a braking procedure, **high speeds** lead to high friction powers which have a direct effect on the friction contact temperature.
High temperatures lead generally to a reduction of the present friction coefficient; this in turn leads to a **reduction of the braking torque**.

1) Braking torque tolerance: + 0 % / + 60 %. For other braking torque adjustments, please see Table "Braking Torque Adjustments", page 6.
2) For the reduction of the dynamic braking torque, dependent on the speed, please see Table "Graduation of the Nominal Braking Torque", page 6.
3) Reduced maximum idle speed for the elevator industry acc. EU Type Examination Certificate on request

Type 896.$^{0}_{1}$ _ _.3_ – Sizes 4 to 100

We reserve the right to make dimensional and constructional alterations.

Bores [mm]

			Sizes					
			4	8	16	32	64	100
Dual circuit brake Type 896.0 _ _ .3 _								
Braking torque adjustment	100 %	d_{min}	8	9	14	18	18	18
		d_{max}	15 [3]	20 [4]	24 [5]	30	35 [6]	46 [7]
	120 %	d_{min}	8	9	14	18	18	20
		d_{max}	15 [3]	20 [4]	24 [5]	30	35 [6]	46 [7]
	75 %	d_{min}	8	9	14	18	18	18
		d_{max}	15 [3]	20 [4]	24 [5]	30	35 [6]	46 [7]
Single circuit brake Type 896.1 _ _ .3 _								
Braking torque adjustment	100 %	d_{min}	8	9	14	18	22	24
		d_{max}	15 [3]	20 [4]	24 [5]	30	35 [6]	46 [7]
	120 %	d_{min}	8	9	14	18	22	24
		d_{max}	15 [3]	20 [4]	24 [5]	30	35 [6]	46 [7]
	75 %	d_{min}	8	9	14	18	22	24
		d_{max}	15 [3]	20 [4]	24 [5]	30	35 [6]	46 [7]

3) Over Ø 13 keyway acc. DIN 6885/3
4) Over Ø 18 keyway acc. DIN 6885/3
5) Over Ø 22 keyway acc. DIN 6885/3
6) Over Ø 32 keyway acc. DIN 6885/3
7) Over Ø 44 keyway acc. DIN 6885/3

Dimensions

	Sizes					
	4	8	16	32	64	100
Ø D	88	108	130	153	168	195
Ø D_1	88	108	130	153	168	195
F	50.5	64	79	88.5	97	111
F_1	112.5	123	166.5	175.6	235	249
F_2	105	128	158	175	190	222
Ø G	26	45	45	52	60	77
Ø G_1	29	36	45	52	60	77
H	29	27	33	37	42	36
H_1	43	45.5	49	55	64	67
h	9	10	13	12	15	17
K	8.3	9	11.6	9.6	11.4	14.6
K_1	8	7.5	10.8	10.8	14	14
K_2	6.7	9.5	10.8	9	9.9	11.5
k	2.8	3.5	4	4	5.3	5.3
k_1	7.2	10.5	10.1	10.2	14.5	19.6
L	87	91	99	109	127	134
L_1	96	101	112	121	142	151
L_2	43.5	45.5	49	54.5	63.5	67
L_3	52.5	55.5	62	66.5	78.5	84
l	50	52	58	67	75	79
	Please observe the load on the shaft or key.					
l_1	18	20	20	25	30	30
	Please observe the load on the shaft or key.					
Ø M	72	90	112	132	145	170
Ø M_1	72	90	112	132	145	170
Ø M_3	35	41	52	61	75	88
Ø R	60	75	93	110.5	124	139
Ø r	50	65	77	90	94	100
s	3 x M4	3 x M5	3 x M6	3 x M6	3 x M8	3 x M8
s_1	3 x M4	3 x M5	3 x M6	3 x M6	3 x M8	6 x M8
s_2	3 x M4	3 x M5	3 x M6	3 x M6	3 x M8	3 x M8
s_3	3 x M4	3 x M4	3 x M4	3 x M5	3 x M5	3 x M5
SW	7	8	10	10	13	13
SW_1	3	4	5	5	6	6
SW_2	Ø 20 [8]	11	14	14	17	17
t	10	10	10	10	10	10
x [9]	± 0.5	± 0.5	± 1	± 1	± 1	± 1
β[°]	30	30	30	30	32	32

Order Number

Without additional parts [10]	**0**
Hand release [10]	**1**
Release monitoring, mechanical	**2**
Release monitoring, contactless [11]	**A**
Hand release / release monitoring, mechanical	**3**
Hand release / release monitoring, contactless [11]	**B**
Flange plate [10]	**4**
Flange plate / hand release [10]	**5**
Flange plate / hand release / release monitoring, mechanical	**6**
Flange plate / hand release / release monitoring, contactless [11]	**C**
Flange plate / release monitoring, mechanical	**7**
Flange plate / release monitoring, contactless [11]	**D**

Connection cable

0	Without additional parts
1	Cover
2	Tacho attachment
3	Cover / tacho attachment

Coil voltage [VDC]
24
104
180
207

We recommend connection via smoothed DC voltage or a *mayr*®-bridge rectifier.

__ / 8 9 6 . __ __ __ . 3 __ / __ / __ / __

Sizes
4
to
100

Dual circuit brake **0**
Single circuit brake **1**

0	Nominal braking torque 100 %
1	Braking torque adjustment 120 %
2	Braking torque adjustment 75 %

Hub bore Ø d H7 (Dimensions page 7)

Keyway acc. DIN 6885/1 or 6885/3

Example: 100 / 896.001.30 / 24 / 40 / 6885/1

8) Hand release lever, round
9) Flush hub position (misalignment “x” permitted)
10) Only the brakes with release monitoring meet the requirements acc. DGUV Rule 115-002 (previously BGV C1) or DIN EN 17206 (Types 896._ _**2**.3_ / 896._ _**A**.3_ / 896._ _**3**.3_ / 896._ _**B**.3_ / 896._ _**6**.3_ / 896._ _**C**.3_ / 896._ _**7**.3_ / 896._ _**D**.3_).
11) Contactless release monitoring device available from Size 8.
The standard contactless release monitoring device is designed as an NO contact; cable length standard: 1 m (Sizes 8 – 100).

ROBA-stop®-silenzio® Type 896.$^{0}_{1}$ _ _.3_ – Sizes 200 to 1800

Noises < 50 dB(A) (Sound pressure level measurement, AC-side switching) at nominal braking torque

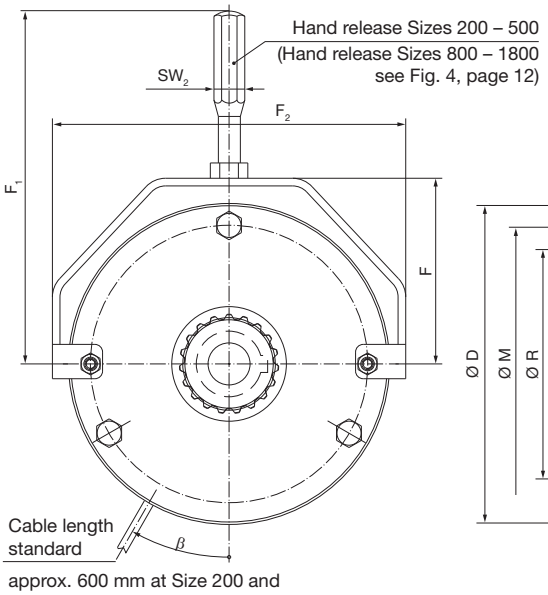

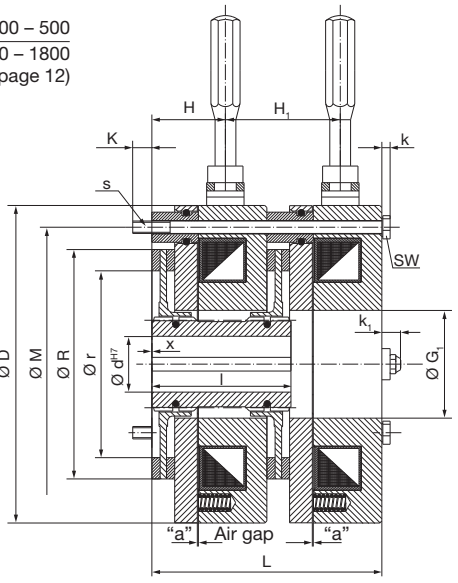

Type 896.001.30
(Dual circuit brake)

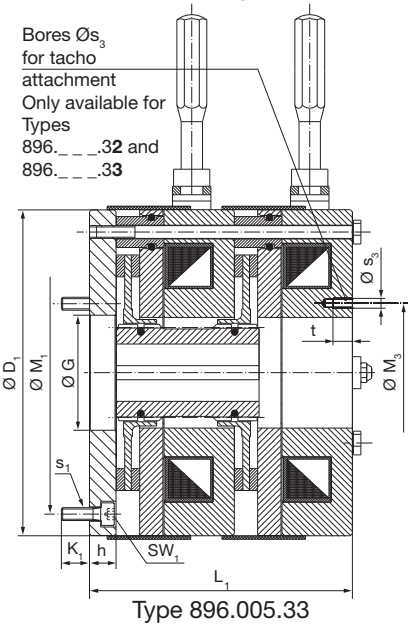

Type 896.005.33
(Dual circuit brake)

Technical Data				Sizes					
				200	300	500	800	1300	1800
Nominal braking torque [1) 2)]	Type 896.00_.3 _	M_N	[Nm]	2 x 200	2 x 300	2 x 500	2 x 800	2 x 1300	2 x 1800
	Type 896.10_.3 _	M_N	[Nm]	200	300	500	800	1300	1800
Electrical power	Type 896.00_.3 _	P_{20}	[W]	2 x 78	2 x 86	2 x 90	2 x 107	2 x 130	2 x 150
	Type 896.10_.3 _	P_{20}	[W]	78	86	90	107	130	150
Maximum speed [2)]		n_{max}	[rpm]	2200	2000	1300	1150	1000	900
Maximum idle speed [3)]				4000	4000	3000	3000	2500	2500
Weight (pilot bored)	Type 896.000.3 _		[kg]	2 x 15.3	2 x 23	2 x 29	2 x 43.5	2 x 59.2	2 x 79.9
Nominal air gap (tolerance ± 0.07)		a	[mm]	0.5	0.5	0.5	0.5	0.5	0.5

Braking Torque Adjustment [Nm]

	Sizes					
	200	300	500	800	1300	1800
Dual circuit brake Type 896.0 _ _ .3 _						
100 %	2 x 200	2 x 300	2 x 500	2 x 800	2 x 1300	2 x 1800
120 %	2 x 240	2 x 360	2 x 600	2 x 1000	2 x 1560	2 x 2150
75 %	2 x 150	2 x 225	2 x 380	2 x 600	2 x 980	2 x 1350
Single circuit brake Type 896.1 _ _ .3 _						
100 %	200	300	500	800	1300	1800
120 %	240	360	600	1000	1560	2150
75 %	150	225	380	600	980	1350

At a braking torque adjustment of 120 % (for Sizes 500 and 800) overexcitation (1.5 to 2 x the nominal voltage) is required for safe and fast release, using our ROBA®-switch fast acting rectifier (please contact *mayr*® power transmission if necessary).

Type 896.101.30
(Single circuit brake)

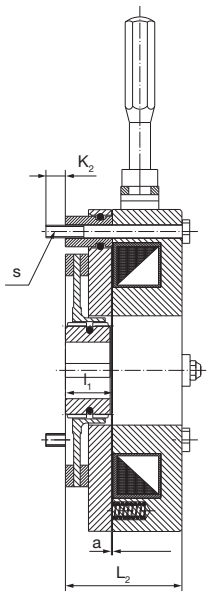

Type 896.105.33
(Single circuit brake)

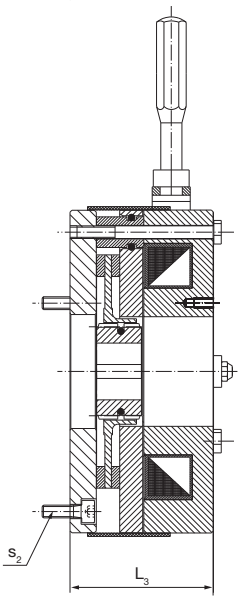

Graduation of the Nominal Braking Torque [%]

			Sizes					
			200	300	500	800	1300	1800
Dynamic braking torque in % of the nominal braking torque M_N		[%]	100	100	-	-	-	-
	up to speed	[rpm]	1900	1700	-	-	-	-
		[%]	80	80	100	100	100	100
	up to speed	[rpm]	2200	2000	1300	1150	1000	900

Example: Single circuit brake Type 896.10_.3 _, Size 300, speed = 2000 rpm;
Dynamic braking torque = 80 % x 300 Nm = 240 Nm

At the start of a braking procedure, **high speeds** lead to high friction powers which have a direct effect on the friction contact temperature.
High temperatures lead generally to a reduction of the present friction coefficient; this in turn leads to a **reduction of the braking torque**.

1) Braking torque tolerance: + 0 % / + 60 %. For other braking torque adjustments, please see Table "Braking Torque Adjustments", page 8.
2) For the reduction of the dynamic braking torque, dependent on the speed, please see Table "Graduation of the Nominal Braking Torque", page 8.
3) Reduced maximum idle speed for the elevator industry acc. EU Type Examination Certificate on request

Types 896.$^{0}_{1}$ _ _.3_ – Sizes 200 to 1800

We reserve the right to make dimensional and constructional alterations.

Bores [mm]			Sizes					
			200	300	500	800	1300	1800
Dual circuit brake Type 896.0 _ _ .3 _								
Braking torque adjustment	100 %	d_{min}	25	35	45	53	66	76
		d_{max}	50 [3]	60 [4]	70 [5]	75	90	100 [6]
	120 %	d_{min}	29	40	50	65	75	85
		d_{max}	50 [3]	60 [4]	65	75	90	95
	75 %	d_{min}	23	26	40	45	56	66
		d_{max}	50 [3]	60 [4]	70 [5]	75	90	100 [6]
Single circuit brake Type 896.1 _ _ .3 _								
Braking torque adjustment	100 %	d_{min}	30	32	45	53	66	77
		d_{max}	50 [3]	60 [4]	70 [5]	75	90	100 [6]
	120 %	d_{min}	35	38	50	65	75	85
		d_{max}	48	60 [4]	65	75	90	95
	75 %	d_{min}	24	24	40	45	56	66
		d_{max}	50 [3]	60 [4]	70 [5]	75	90	100 [6]

3) Over Ø 48 keyway acc. DIN 6885/3
4) Over Ø 56 keyway acc. DIN 6885/3
5) Over Ø 65 keyway acc. DIN 6885/3
6) Over Ø 95 keyway acc. DIN 6885/3

Dimensions	Sizes					
	200	300	500	800	1300	1800
Ø D	223	261	285	329	370	415
Ø D_1	223	264	288	332	373	418
F	126.5	148	166.5	on request		
F_1	325.5	487.5	705.5	on request		
F_2	256	296	310	on request		
Ø G	84	96	114	135	146	160
Ø G_1	84	96	114	135	146	160
H	48	50.5	28.5	on request		
H_1	76	79.5	86	on request		
h	19	21	28	31	30	36
K	16.4	18.7	25.5	28	28	32
K_1	18	18	19	22	27	26
K_2	12.2	18.1	21.5	22.5	27.5	24.5
k	8.4	10	10	13	13	13
k_1	18	21	19	on request		
L	152	159	172	189	199	205
L_1	171	180	200	220	229	241
L_2	76	79.5	86	94.5	99.5	102.5
L_3	95	100.5	114	125.5	129.5	138.5
l	88	93	102	122	142	152
	Please observe the load on the shaft or key!					
l_1	35	50	50	60	70	75
	Please observe the load on the shaft or key!					
Ø M	196	230	250	290	330	370
Ø M_1	196	230	250	290	330	370
Ø M_3	100	112	145	165	175	200
Ø R	170	188	213	246	283.5	320
Ø r	122	135	150	180	208	230
s Type 896.0_ _.3_	3 x M10	3 x M12	6 x M12	6 x M16	8 x M16	8 x M16
s Type 896.1_ _.3_	3 x M10	3 x M12	3 x M12	3 x M16	4 x M16	4 x M16
s_1	6 x M10	6 x M12	6 x M16	6 x M16	8 x M16	8 x M20
s_2	3 x M10	3 x M12	3 x M16	3 x M16	4 x M16	4 x M20
s_3	3 x M6	3 x M6	6 x M8	6 x M8	6 x M8	6 x M8
SW	16	18	18	24	24	24
SW_1	8	10	14	14	14	17
SW_2	14	17	Ø 25 [7]	on request		
t	10	10	13	13	13	13
x [8]	± 1	± 1	± 1	± 0.5	± 1	± 1
β[°]	32	31	25	25	25	25

Order Number

Without additional parts [9]	0
Hand release [9]	1
Release monitoring, mechanical	2
Release monitoring, contactless [10]	A
Hand release / release monitoring, mechanical	3
Hand release / release monitoring, contactless [10]	B
Flange plate [9]	4
Flange plate / hand release [9]	5
Flange plate / hand release / release monitoring, mechanical	6
Flange plate / hand release / release monitoring, contactless [10]	C
Flange plate / release monitoring, mechanical	7
Flange plate / release monitoring, contactless [10]	D

Connection cable

0	Without additional parts
1	Cover
2	Tacho attachment
3	Cover / tacho attachment

Coil voltage [VDC]
24
104
180
207

We recommend connection via smoothed DC voltage or a *mayr*®-bridge rectifier.

__ / 8 9 6 . __ __ __ . 3 __ / __ / __ / __

Sizes 200 to 1800

Dual circuit brake	0
Single circuit brake	1

0	Nominal braking torque 100 %
1	Braking torque adjustment 120 %
2	Braking torque adjustment 75 %

Hub bore Ø d H7 (Dimensions page 9)

Keyway acc. DIN 6885/1 or 6885/3

Example: 200 / 896.001.30 / 24 / 40 / 6885/1

At a braking torque adjustment of 120 % (for Sizes 500 and 800) overexcitation (1.5 to 2 x the nominal voltage) is required for safe and fast release, using our ROBA®-switch fast acting rectifier (please contact *mayr*® power transmission if necessary).

7) Hand release lever, round
8) Flush hub position (misalignment "x" permitted)
9) Only the brakes with release monitoring meet the requirements acc. DGUV Rule 115-002 (previously BGV C1) or DIN EN 17206 (Types 896._ **_2**.3_ / 896._ **_A**.3_ / 896._ **_3**.3_ / 896._ **_B**.3_ / 896._ **_6**.3_ / 896._ **_C**.3_ / 896._ **_7**.3_ / 896._ **_D**.3_).
10) The standard contactless release monitoring device is designed as an NO contact; cable length standard: 1 m (Size 200) or 2 m (Sizes 300 – 1800).

ROBA-stop®-silenzio® Double rotor design Type 896.2_ _.3_ – Sizes 300 to 1800

Noises < 65 dB(A) (Sound pressure level measurement) at nominal braking torque

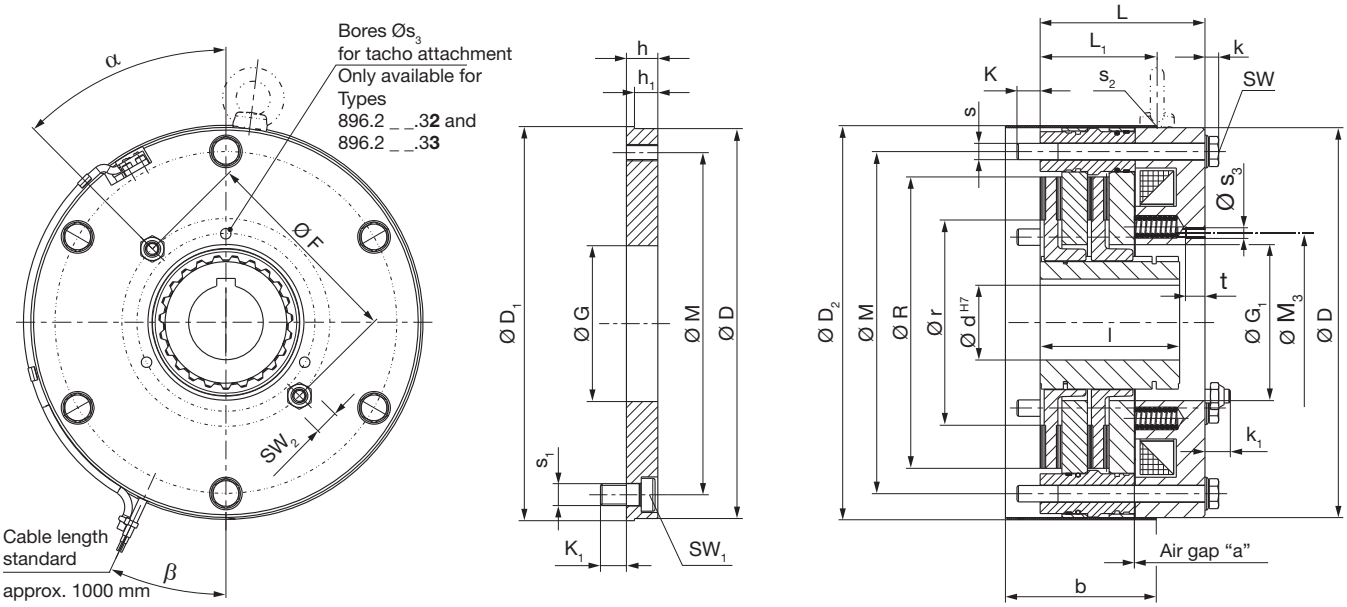

Technical Data				Sizes				
				300	500	800	1300	1800
Nominal braking torque [1]	**Type 896.20_.3 _**	M_N	[Nm]	600	1000	1600	2600	3600
Electrical power	**for overexcitation** [2]	P_{20}	[W]	348	352	412	500	552
	for nominal voltage	P_{20}	[W]	87	88	103	125	138
Maximum speed		n_{max}	[rpm]	300	300	300	250	250
Weight	**without flange plate**		[kg]	33	44	67	93	121
	with flange plate		[kg]	40.5	53	80	113	153
Nominal air gap		a	[mm]	$0.55^{+0.15}_{-0.10}$	$0.55^{+0.15}_{-0.10}$	$0.55^{+0.15}_{-0.10}$	$0.7^{+0.12}_{-0.13}$	$0.7^{+0.12}_{-0.13}$

Braking Torque Adjustment [Nm]

	Sizes				
	300	500	800	1300	1800
100 %	600	1000	1600	2600	3600
120 %	720	1200	2000	3120	4300
75 %	450	760	1200	1960	2700

At nominal braking torque 100 % (for Sizes 500 and 800) and **at a braking torque adjustment of 120 % (for all Sizes)** overexcitation (1.5 to 2 x the nominal voltage) is required for safe and fast release, using our ROBA®-switch fast acting rectifier (please contact *mayr*® power transmission if necessary).

1) Braking torque tolerance: + 0 % / + 60 %. For other braking torque adjustments, please see Table "Braking Torque Adjustments", page 10.
2) When using a ROBA®-switch

Type 896.2 _ _.3_ – Sizes 300 to 1800

We reserve the right to make dimensional and constructional alterations.

Bores [mm]

Braking torque adjustment			Sizes 300	500	800	1300	1800
100 %		d_{min}	35	45	53	66	76
		d_{max}	60 [3]	70 [4]	75	90	100 [5]
120 %		d_{min}	40	50	65	75	85
		d_{max}	60 [3]	65	75	90	95
75 %		d_{min}	26	40	45	56	66
		d_{max}	60 [3]	70 [4]	75	90	100 [5]

3) Over Ø 56 keyway acc. DIN 6885/3
4) Over Ø 65 keyway acc. DIN 6885/3
5) Over Ø 95 keyway acc. DIN 6885/3

Dimensions

Dimensions	Sizes 300	500	800	1300	1800
b	90	102	114	125	130
Ø D	261	285	329	370	415
Ø D_1	264	288	332	373	418
Ø D_2	264	288	332	373	418
Ø F	209	152	181	197	225
Ø G	96	114	135	146	160
Ø G_1	96	114	135	146	160
h	21	28	31	30	36
h_1	15	17	19	23	23
k	10	10	13	13	13
k_1	21	19	25	25	24
K	18.1	16.9	23.3	23.3	28.3
K_1	18	19	22	27	26
l	93	102	122	142	152
	Please observe the load on the shaft or key!				
L	109.4	120.6	133.7	143.7	148.7
L_1	74.4	85.6	93.7	106.7	110.7
Ø M	230	250	290	330	370
Ø M_3	112	145	165	175	200
Ø r	135	150	180	208	230
Ø R	188	213	246	283.5	320
s	3 x M12	6 x M12	6 x M16	8 x M16	8 x M16
s_1	6 x M12	6 x M16	6 x M16	8 x M16	8 x M20
s_2 [6]	M10	M10	M10	M12	M12
s_3	3 x M6	6 x M8	6 x M8	6 x M8	6 x M8
SW	18/19	18/19	24	24	24
SW_1	10	14	14	14	17
SW_2	16/17	16/17	18/19	24	24
t	10	13	13	13	13
α [°]	35	45	45	45	45
β[°]	31	25	25	25	25

Order Number

Without additional parts [7]	0
Emergency hand release [7]	1
Release monitoring, mechanical	2
Release monitoring, contactless [8]	A
Emergency hand release / release monitoring, mechanical	3
Emergency hand release / release monitoring, contactless [8]	B
Flange plate [7]	4
Flange plate / emergency hand release [7]	5
Flange plate / emergency hand release / release monitoring, mechanical	6
Flange plate / emergency hand release / release monitoring, contactless [8]	C
Flange plate / release monitoring, mechanical	7
Flange plate / release monitoring, contactless [8]	D

Connection cable

0	Without additional parts
1	Cover
2	Tacho attachment
3	Cover / tacho attachment

Coil voltage [VDC]: **16**, **24**, **104**, **180**, **207**

Coil voltage 16 VDC only at Sizes 300 – 500

We recommend connection via smoothed DC voltage or a *mayr*®-bridge rectifier.

__ / 8 9 6 . 2 __ __ . 3 __ / __ / __ / __

Sizes 300 to 1800

Nominal braking torque 100 %	0
Braking torque adjustment 120 %	1
Braking torque adjustment 75 %	2

At nominal braking torque 100 % (for Sizes 500 and 800) and **at a braking torque adjustment of 120 % (for all Sizes)** overexcitation (1.5 to 2 x the nominal voltage) is required for safe and fast release, using our ROBA®-switch fast acting rectifier (please contact *mayr*® power transmission if necessary).

Hub bore Ø d H7 (Dimensions page 11)

Keyway acc. DIN 6885/1 or 6885/3

Example: 800 / 896.205.30 / 104 / 70 / 6885/1

6) Eyebolt (installation aid, not included in delivery).
7) Only the brakes with release monitoring meet the requirements acc. DGUV Rule 115-002 (previously BGV C1) or DIN EN 17206 (Types 896.2_**2**.3_ / 896.2_**A**.3_ / 896.2_**3**.3_ / 896.2_**B**.3_ / 896.2_**6**.3_ / 896.2_**C**.3_ / 896.2_**7**.3_ / 896.2_**D**.3_).
8) The standard contactless release monitoring device is designed as an NO contact; cable length standard: 2 m.

ROBA-stop®-silenzio® – Short Description Installation Type 896.01_ _.3_

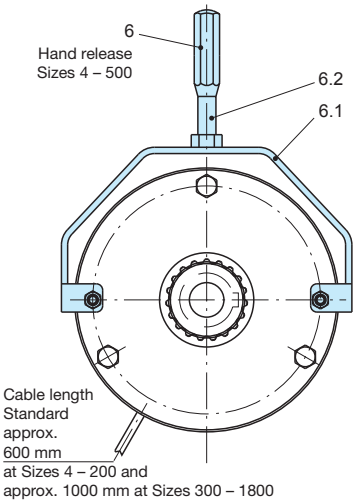

Fig. 1

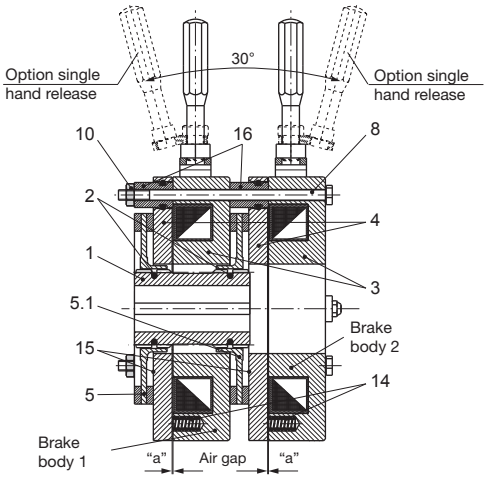

Fig. 2 (Dual circuit brake)

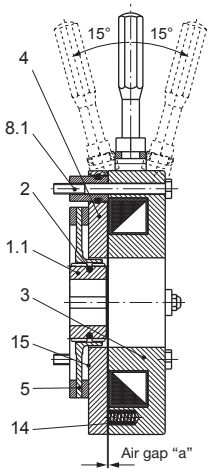

Fig. 3 (Single circuit brake)

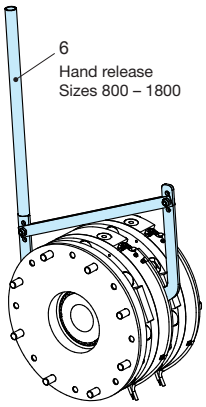

Fig. 4

Parts List (Only use *mayr*® original parts)

1	Hub assembly with 2 O-rings (2)	8	Hexagon head screw
1.1	*Hub assembly with 1 O-ring (2)	8.1	**Hexagon head screw
2	O-ring	10	Transportation lock
3	Coil carrier assemblies 1 and 2	14	Thrust spring
4	Armature disks 1 and 2	15	Shoulder screw
5	Rotor 1	16	Distance bolt
5.1	Rotor 2		
6	Hand release assembly		
6.1	Switch bracket		
6.2	Hand release rod		

* Only on single circuit brake designs

** Sizes 4 – 300 only on single circuit brake designs

Installation Conditions (Figs. 1, 2 and 3)

- The eccentricity of the shaft end in relation to the mounting pitch circle must not exceed 0.2 mm.
- The positional tolerance of the threads for the hexagon head screws (8 and 8.1) must not exceed 0.2 mm.
- The axial run-out deviation of the screw-on surface to the shaft must not exceed the permitted axial run-out tolerance acc. DIN 42955 R. The reference diameter is the pitch circle diameter for securement of the brakes. Larger deviations can lead to a drop in torque, to continuous grinding of the rotor and to overheating.
- The tolerances of the hub (1) and the shaft must be selected so that the hub toothing (1) is not widened. Widening of the toothing leads to the rotors (5 and 5.1) jamming on the hub (1) and therefore to brake malfunctions (recommended hub – shaft tolerance H7/k6).
- The rotors (5 and 5.1) and brake surfaces must be oil and grease-free. A suitable counter friction surface (steel or cast iron) must be used. Sharp-edged interruptions on the friction surfaces must be avoided. Recommended surface quality in the area of the friction surface Ra = 0.8 – 1.6 µm. **In particular customer-side mounting surfaces made of grey cast iron are to be rubbed down additionally with sandpaper (grain ≈ 60 to 100).**

Short Description (Figs. 1 and 2)

Please find a detailed installation description in the Installation and Operational Instructions for the product (also on www.mayr.com).

1. Mount the hub assembly with the O-rings (Item 1 / **O-rings must be slightly greased**) onto the shaft, bring it into the correct position (the length of the key should lie over the entire hub) and secure it axially (e.g. using a locking ring).
2. Push rotor 1 (5) by hand using light pressure over both O-rings (2) onto the hub (1), so that the friction lining of rotor 1 (5) lies against the machine wall (the rotor collar should be facing away from the machine wall). Make sure that the toothing moves easily.
   Do not damage the O-rings!
3. Push brake body 1 over hub (1) and rotor collar of rotor 1 (5) (the fixing holes should align with the threaded holes in the machine wall).
4. Push rotor 2 (5.1) by hand using light pressure over an O-ring (2) onto the hub (1), so that the friction lining of rotor 2 (5.1) lies against the brake body 1 (the rotor collar should be facing the machine wall). Make sure that the toothing moves easily.
   Do not damage the O-ring.
5. Insert the hexagon head screws (8) into the bores in brake body 2, which are equipped with distance bolts (16), and then join with brake body 1 and screw onto the machine wall.
   Tighten the hexagon head screws (8) evenly all around **using a torque wrench to a tightening torque acc. Table 1**.
6. **Inspect air gaps "a" according to Table 1.**
   The nominal air gap must be given.

Hand Release

A hand release (6) is installed manufacturer-side, dependent on Size and Type (see Type key on pages 7, 9 and Table 1).
From Size 800, both circuits are released simultaneously with a lever (see Fig. 4).

Technical Data – Installation			Sizes										
			4	8	16	32	64	100	200	300	500	800	1300	1800
Nominal air gap	a	[mm]	0.45 ± 0.07	0.45 ± 0.07	0.5 ± 0.07	0.5 + 0.04 - 0.10	0.5 + 0.04 - 0.10	0.5 ± 0.07	0.5 ± 0.07	0.5 ± 0.07	0.5 ± 0.07	0.5 ± 0.07	0.5 ± 0.07	0.5 ± 0.07
Release force per lever / at nominal torque	F	[N]	35	35	110	100	130	200	250	250	300	approx. 300	approx. 320	approx. 350
Actuation angle Hand release	α	[°]	15	15	15	15	15	15	15	15	-	-	-	-
Tightening torque Fixing screw Item 8	T_A	[Nm]	3	5	10	13	30	36	71	123	123	250	250	300

Table 1

ROBA-stop®-silenzio® – Brake Dimensioning

Brake Size Selection

1. Brake selection

$$M_{erf.} = \frac{9550 \times P}{n} \times K \leq M_N \quad [Nm]$$

$$t_v = \frac{J \times n}{9.55 \times M_v} \quad [s]$$

$$t_4 = t_v + t_1 \quad [s]$$

$$M_v = M_N + (-)^* M_L \quad [Nm]$$

2. Inspection of thermic load

$$Q_r = \frac{J \times n^2}{182.4} \times \frac{M_N}{M_v} \quad [J/\text{ braking}]$$

The permitted friction work (switching work) $Q_{r\,zul.}$ per braking for the specified switching frequency can be taken from the Friction-Power Diagrams (page 14).

If the friction work per braking is known, the max. switching frequency can also be taken from the Friction-Power Diagrams (page 14).

Key:

J	[kgm²]	Mass moment of inertia
K	[-]	Safety factor (1.5 – 3 x depending on conditions)
$M_{erf.}$	[Nm]	Required braking torque
M_v	[Nm]	Deceleration torque
M_L	[Nm]	Load torque * sign in brackets (-) is valid if load is braked during downward movement
M_N	[Nm]	Nominal torque (Technical Data pages 6 – 10)
n	[rpm]	Speed
P	[kW]	Input power
t_v	[s]	Braking action
t_1	[s]	Connection time (Table 5, page 17)
t_4	[s]	Total switch-on time
Q_r	[J]	Friction work present per braking
$Q_{r\,0.1}$	[J]	Friction work per 0.1 mm wear (Table 2)
$Q_{r\,ges.}$	[J]	Friction work up to rotor replacement (Table 2)
$Q_{r\,zul.}$	[J]	Permitted friction work (permitted switching work) per braking (page 14)

Due to operating parameters such as sliding speed, pressing or temperature the **wear values** can **only be considered guideline values**.

Friction Work				Sizes											
				4	8	16	32	64	100	200	300	500	800	1300	1800
per 0.1 mm wear	Type 896._ _ _-_ _	$Q_{r\,0.1}$	[10^6 J]	5	6.5	12.5	16	50	40	61	75	215	249	357	447
up to rotor replacement	Type 896._ _ _-_ _	$Q_{r\,ges.}$	[10^6 J]	7.5	26	77	81	199	120	257	377	860	747	1428	1788

Table 2

Mass Moment of Inertia Rotor + hub with d_{max}				Sizes											
				4	8	16	32	64	100	200	300	500	800	1300	1800
ROBA-stop®-silenzio®															
	Type 896.00_.3_	J_{R+H}	[10^{-4} kgm²]	0.316	0.799	2.40	6.11	11.9	23.7	58.1	89.1	188	389	695	1110
	Type 896.10_.3_	J_{R+H}	[10^{-4} kgm²]	0.156	0.393	1.14	2.92	5.82	11.3	28.3	46	93.5	193	348	558
Double rotor design															
	Type 896.20_.3_	J_{R+H}	[10^{-4} kgm²]	-	-	-	-	-	-	-	89.1	188	389	695	1110

Table 3

ROBA-stop®-silenzio® – Friction-Power Diagrams – Sizes 300 to 1800

ROBA-stop®-silenzio®
Type 896.10_._ _

n = 750 rpm
for Sizes 500 to 1300

n = 500 rpm
for Size 1800

Permitted friction powers at higher speeds on request.

Diagram 1

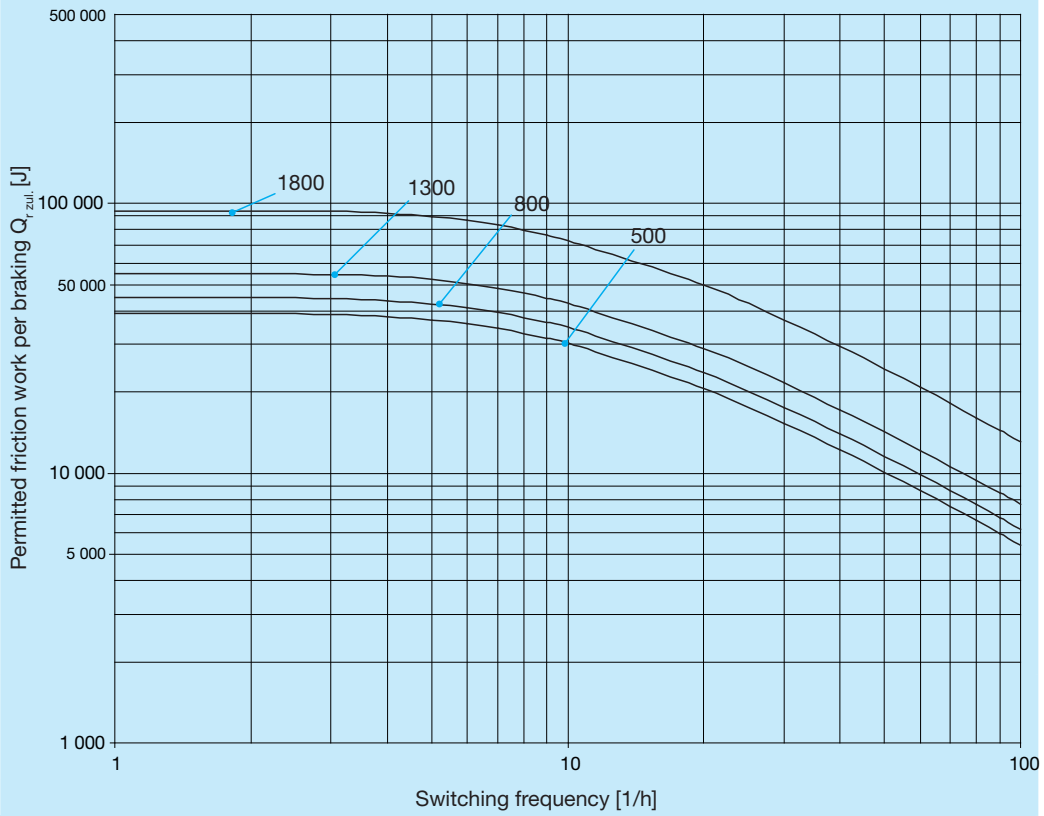

ROBA-stop®-silenzio®
Double rotor design
Type 896.20_._ _

n = 300 rpm
for Sizes 300 to 800

n = 250 rpm
for Sizes 1300 to 1800

Permitted friction powers at higher speeds on request.

Diagram 2

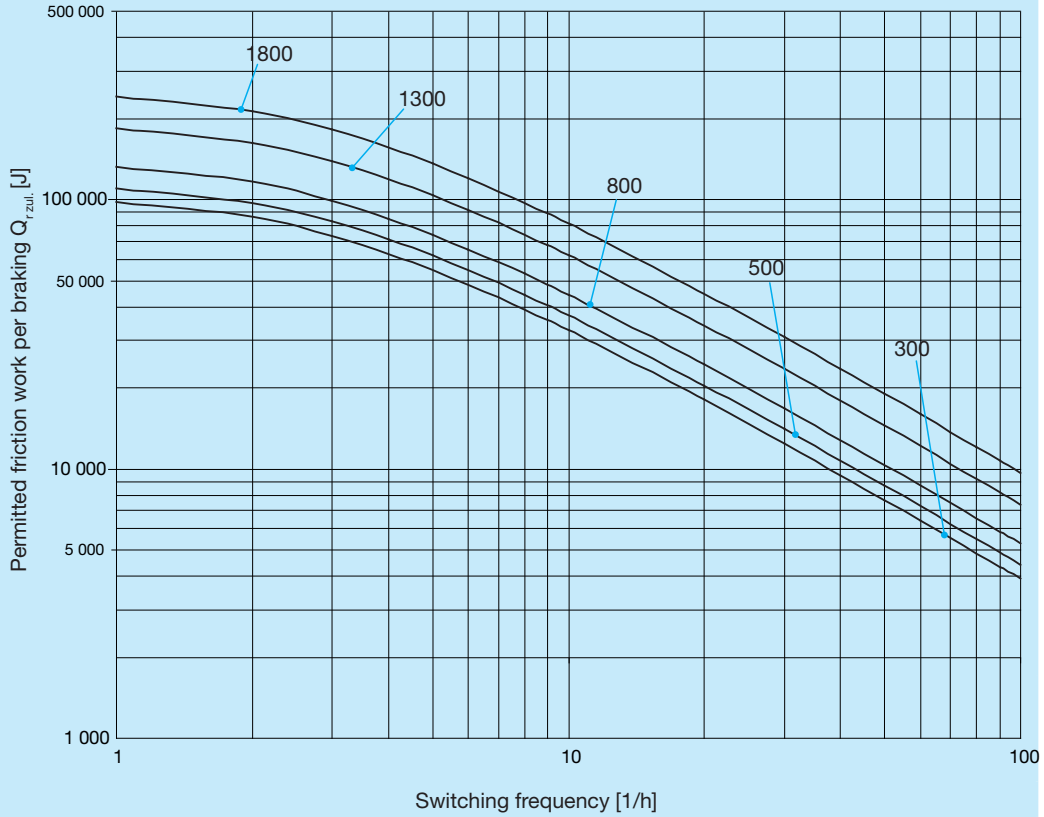

ROBA-stop®-silenzio® – Permitted Friction Work – Sizes 4 to 300

Permitted Friction Work $Q_{zul.}$

The permitted friction work Q_{zul} dependent on the intended switching frequency S_h can be calculed using the formula below and the values listed in Table 4.
Here, the transition switching frequency $S_{hü}$ represents a characteristic brake value.

1. Calculation of the permitted friction work $Q_{zul.}$

$$Q_{zul.} = Q_E \times \left(1 - e^{-\frac{S_{hü}}{S_h}}\right) \quad [J]$$

2. Example

Data:

Size 16
n =1500 rpm
S_h = 4/h

Values from Table 4:

Q_E = 12000 J up to n = 2000 rpm
$S_{hü}$ = 8.2/h

Calculation:

$$Q_{zul.} = 12000 \times \left(1 - e^{-\frac{8.2}{4}}\right) \quad [J]$$

$$Q_{zul.} = 10455 \quad [J]$$

Key:

n	[rpm]	Speed
Q_E	[J]	Max. permitted friction work (Table 4)
$Q_{zul.}$	[J]	Permitted friction work
S_h	[1/h]	Switching frequency
$S_{hü}$	[1/h]	Transition switching frequency (Table 4)

3. Diagram: The diagram only **serves** as **an example**

ROBA-stop®-silenzio®
Type 896.10_._ _
n = 2000 rpm
for Size 16

Diagram example

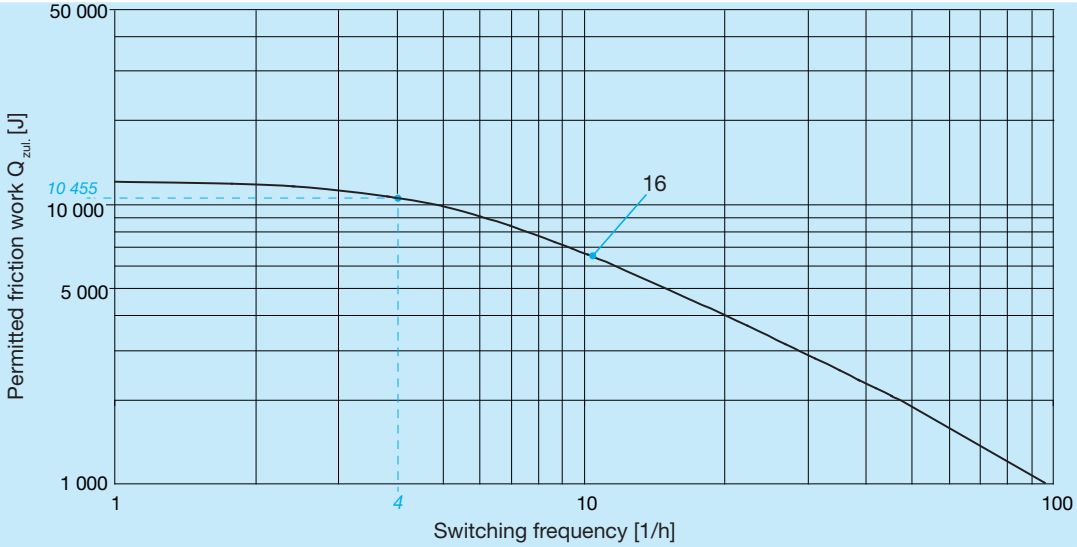

Friction Work Q_E / Transition Switching Frequency $S_{hü}$			Sizes							
			4	8	16	32	64	100	200	300
Max. permitted friction work	Q_E	[J]	6000	7500	14000	18000	-	-	-	-
up to speed	n	[rpm]	1500	1250	1000	850	-	-	-	-
Transition switching frequency	$S_{hü}$	[1/h]	9.2	9.2	7.1	6.9	-	-	-	-
Max. permitted friction work	Q_E	[J]	5000	6000	12000	15000	22000	28000	36000	42000
up to speed	n	[rpm]	3000	2500	2000	1700	1500	1250	1100	1000
Transition switching frequency	$S_{hü}$	[1/h]	11	11.5	8.2	8.3	6.9	7.2	5	4
Max. permitted friction work	Q_E	[J]	1000	1200	2000	3000	12000	15000	20000	24000
up to speed	n	[rpm]	6000	5000	4000	3400	3000	2500	2200	2000
Transition switching frequency	$S_{hü}$	[1/h]	55.5	57.5	49.4	41.3	12.6	13.4	9	7

Table 4

ROBA-stop®-silenzio® – Further Options

In addition to the standard brakes, *mayr*® power transmission provides a multitude of further designs, which cannot be described in detail in this catalogue.

Some of the most frequently requested options are:

- Dust-proof design with cover and cover plate
- Directly toothed shaft
- Terminal box
- ROBA®-ES attachment
- Customer-specific flange plate
- Design with redundant magnetic coil
- Redundance without braking torque doubling

Please contact *mayr*® for further information.

Dust-proof design

The dust-proof design is equipped with a cover (Item 1) and with a cover plate (Item 2).

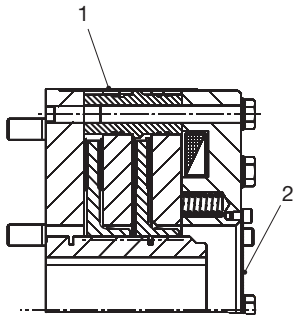

Fig. 1

Directly toothed shaft

Directly toothed shaft (Item 1) for larger shaft diameters and higher transmittable torques.

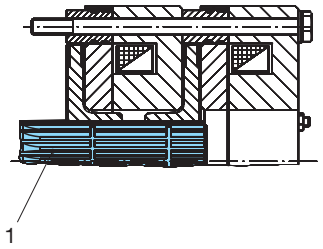

Fig. 2

Terminal box

Terminal box (Item 1) for the wiring and storage of rectifiers (ROBA®-switch, bridge rectifier).

Also available on request are designs for a conduit connection.

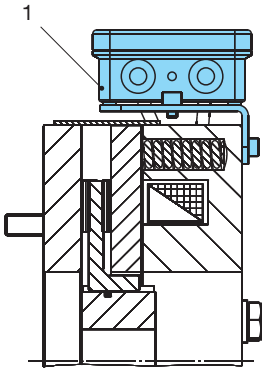

Fig. 3

ROBA®-ES attachment

Space-saving connection of a ROBA®-ES shaft coupling (Item 1) directly onto the hub. The flexible shaft coupling of the ROBA®-ES Type series compensates for shaft misalignments and is vibration-damping.

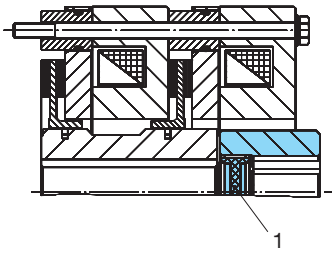

Fig. 4

Special flange plate

We offer a range of flange plates for customer-specific solutions, such as for example the special flange plate shown in Fig. 5 (Item 1) with customer-tailored centering (Item 2).

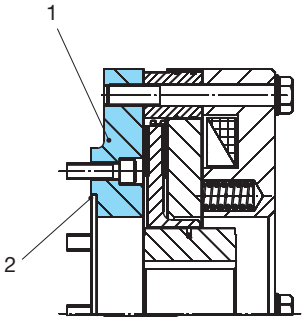

Fig. 5

Design with redundant magnetic coil

The coil carrier is equipped with 2 magnetic coils (Item 1).

The brake is designed for higher levels of operational safety through the redundant magnetic coil.

This means that, should one magnetic coil fail, the electrical brake release is still guaranteed.

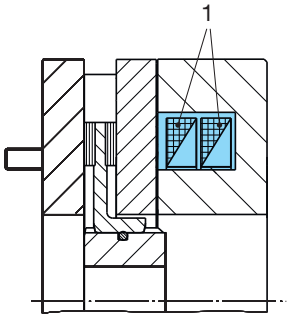

Fig. 6

Redundance without braking torque doubling

The brake is equipped with a double safety braking system.

It is redundant, functioning without braking torque doubling in case of emergency stop braking actions.

This means that, should one brake circuit fail, the braking effect is still maintained.

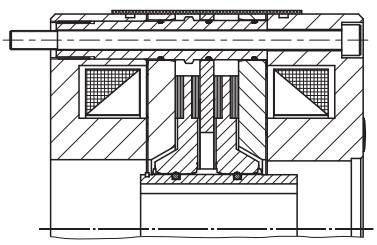

Fig. 7

ROBA-stop®-silenzio® – Switching Times

The switching times are only valid for the braking torques stated in the catalogue.
According to Directive VDI 2241, the switching times are measured at a sliding speed of 1 m/s with reference to a mean friction radius. The brake switching times are influenced by the temperature, by the air gap between the armature disk and the coil carrier, which depends on the wear status of the linings, and by the type of voltage-limiting components.
The values stated in the table are mean values which refer to the nominal air gap and the nominal torque on a warm brake.
Typical switching time tolerances are ± 20 %.

Please Observe: DC-side switching
When measuring the DC-side switching times (t_{11} time), the inductive switch-off voltage peaks are according to VDE 0580 limited to values smaller than 1200 volts. If other voltage-limiting components and devices are installed, this switching time t_{11} and therefore also switching time t_1 increase.

Switching Times Types 896._0_ ._ _				Sizes											
				4	8	16	32	64	100	200	300	500	800	1300	1800
Nominal braking torque	Type 896.10_._ _	M_N	[Nm]	4	8	16	32	64	100	200	300	500	800	1300	1800
Connection time	DC-side switching	t_1	[ms]	33	46	99	121	110	160	190	245	260	270	270	300
	AC-side switching	t_1	[ms]	135	196	398	518	447	488	968	1087	1133	1231	1464	1920
Response delay on connection	DC-side switching	t_{11}	[ms]	6	9	20	32	34	35	60	60	65	65	80	100
	AC-side switching	t_{11}	[ms]	52	79	145	229	164	154	412	429	518	531	588	800
Separation time		t_2	[ms]	52	70	94	120	174	234	270	308	444	581	589	850

Table 5: Switching times Type 896._0_._ _: ROBA-stop®-silenzio®, Double Rotor design from Size 300

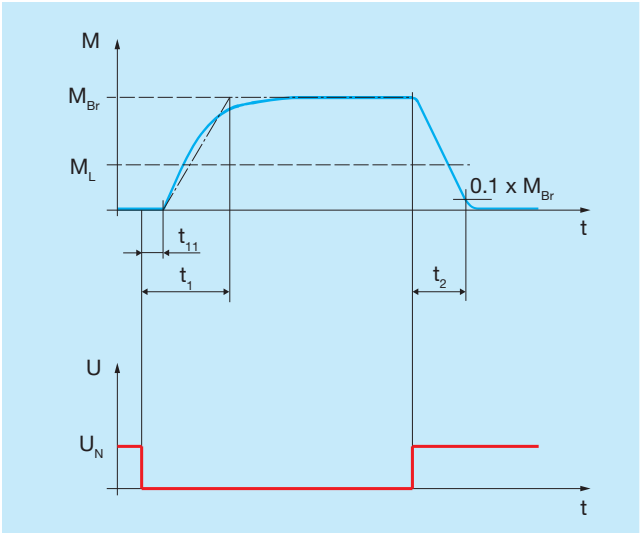

Diagram 4: Torque-Time Diagram

Key:

M_{Br} = Braking torque
M_L = Load torque
t_1 = Connection time
t_{11} = Response delay on connection
t_2 = Separation time
U_N = Coil nominal voltage

Switching times for the elevator industry acc. EU Type Examination Certificate on request.

ROBA-stop®-silenzio® – Electrical Connection

Electrical Connection and Wiring

DC current is necessary for operation of the brake. The coil voltage is indicated on the Type tag as well as on the brake body and is designed according to the DIN IEC 60038 (±10 % tolerance). Operation can take place with alternating voltage using a rectifier or another suitable DC power supply. The connection possibilities can vary dependent on the brake equipment. Please follow the exact connections according to the Wiring Diagram. The manufacturer and the user must observe the applicable regulations and standards (e.g. DIN EN 60204-1 and DIN VDE 0580). Their observance must be guaranteed and double-checked!

Supply voltage requirements when **operating noise-damped brakes**

In order to minimise **noise development of the released brake**, it must only be operated via DC voltage with low ripple content. AC current operation can take place using a **bridge rectifier** or another suitable DC power supply.
Supplies whose output voltages have a high ripple content (e.g. a half-wave rectifier, phase angle control systems, ...) are not suitable for operation of the brake.

At variance with this, brakes specially dimensioned for overexcitation must be operated with the ROBA®-switch fast acting rectifier.

Earthing Connection

The brake is designed for Protection Class I. This protection covers not only the basic insulation, but also the connection of all conductive parts to the protective conductor (PE) on the fixed installation. If the basic insulation fails, no contact voltage will remain. Please carry out a standardised inspection of the protective conductor connections to all contactable metal parts!

Device Fuses

To protect against damage from short circuits, please add suitable device fuses to the mains cable.

Switching Behaviour

The reliable operational behaviour of a brake is to a large extent dependent on the switching mode used. Furthermore, the switching times are influenced by the temperature and the air gap between the armature disk and the coil carrier (dependent on the wear condition of the linings).

Magnetic Field Build-up

When the voltage is switched on, a magnetic field is built up in the brake coil, which attracts the armature disk to the coil carrier and releases the brake.

• Field Build-up with Normal Excitation

If the magnetic coil is energised with nominal voltage, the coil current does not immediately reach its nominal value. The coil inductivity causes the current to increase slowly as an exponential function. Accordingly, the build-up of the magnetic field takes place more slowly and the braking torque drop (curve 1, Fig. above) is also delayed.

• Field Build-up with Overexcitation

A quicker drop in braking torque is achieved if the coil is temporarily placed under a higher voltage than the nominal voltage, as the current then increases more quickly. Once the brake is released, it needs to be switched over to the nominal voltage (curve 2, Fig. above). The relationship between overexcitation and separation time t_2 is roughly indirectly proportional. This means that, using overexcitation voltage U_O (= doubled nominal voltage U_N), the separation time t_2 for release of the brake is halved. The ROBA®-switch fast acting rectifier works on this principle.

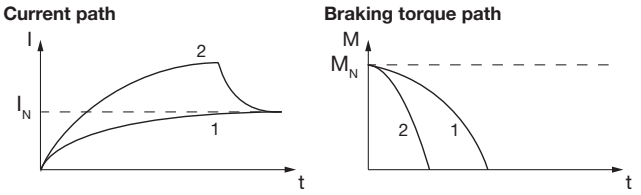

Operation with overexcitation requires an inspection of:
- the required overexcitation time *
- as well as the RMS coil capacity ** with a cycle frequency higher than 1 cycle per minute.

*** Overexcitation time t_O**

Increased wear, and therefore an increasing air gap as well as coil heating lengthen the separation times t_2 for the brake. For this reason, at least double the separation time t_2 at nominal voltage must be selected as overexcitation time t_O on each brake size

The spring forces also influence the brake separation times t_2: Higher spring forces increase the separation times t_2 and lower spring forces reduce the separation times t_2.

- Spring force (braking torque adjustment) < 100 %:

The overexcitation time t_O is less than the doubled separation time t_2 on each brake size.

- Spring force (braking torque adjustment) = 100 %:

The overexcitation time t_O equals the doubled separation time t_2 on each brake size.

- Spring force (braking torque adjustment) > 100 %:

The overexcitation time t_O is higher than the doubled separation time t_2 on each brake size.

**** RMS coil capacity P**

$P \leq P_N$

The coil capacity P must not be larger than P_N. Otherwise the coil may fail due to thermal overload.

P	[W]	RMS coil capacity dependent on switching frequency, overexcitation and duty cycle $P = \frac{P_O \times t_O + P_N \times t_N}{T}$
P_N	[W]	Coil nominal capacity (catalogue values, Type tag)
P_O	[W]	Coil capacity on overexcitation $P_O = \left(\frac{U_O}{U_N}\right)^2 \times P_N$
t_O	[s]	Overexcitation time
t_N	[s]	Time of operation with coil nominal voltage
t_{off}	[s]	Time without voltage
t_{on}	[s]	Time with voltage
T	[s]	Total time ($t_O + t_N + t_{off}$)
U_O	[V]	Overexcitation voltage (bridge voltage)
U_N	[V]	Coil nominal voltage

Time Diagram:

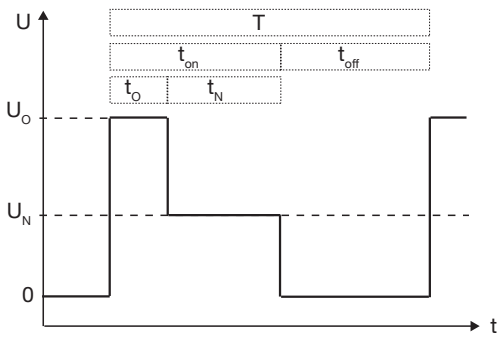

ROBA-stop®-silenzio® – Electrical Connection

Magnetic Field Removal

• AC-side Switching

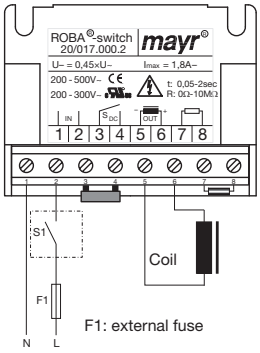

The power circuit is interrupted in front of the rectifier. The magnetic field slowly reduces. This delays the rise in braking torque.

When switching times are not important, please switch AC-side, as no protective measures are necessary for coil and switching contacts.

AC-side switching means **low-noise switching**; however, the brake engagement time is longer (approx. 6 – 10 times longer than with DC-side switch-off), use for non-critical braking times.

• DC-side Switching

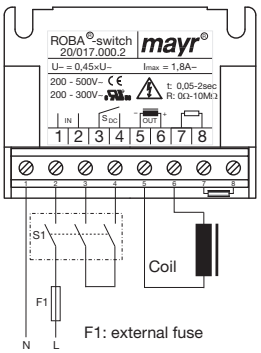

The power circuit is interrupted between the rectifier and the coil as well as mains-side. The magnetic field reduces extremely quickly. This causes a quick rise in braking torque.

When switching DC-side, high voltage peaks are produced in the coil, which can lead to wear on the contacts from sparks and to destruction of the insulation.

DC-side switching means **short brake engagement times (e.g. for EMERGENCY STOP operation)**; however, louder switching noises.

• Protection Circuit

When using DC-side switching, the coil must be protected by a suitable protection circuit according to VDE 0580, which is integrated in *mayr*®-rectifiers. To protect the switching contact from consumption when using DC-side switching, additional protective measures may be necessary (e.g. series connection of switching contacts). The switching contacts used should have a minimum contact opening of 3 mm and should be suitable for inductive load switching. Please make sure on selection that the rated voltage and the rated operating current are sufficient. Depending on the application, the switching contact can also be protected by other protection circuits (e.g. *mayr*®-spark quenching unit), although this may of course then alter the switching times.

Switching Example

The *mayr*®-rectifiers shown in the Figure below serve as a switching example (e. g. combined switching for the elevator industry).

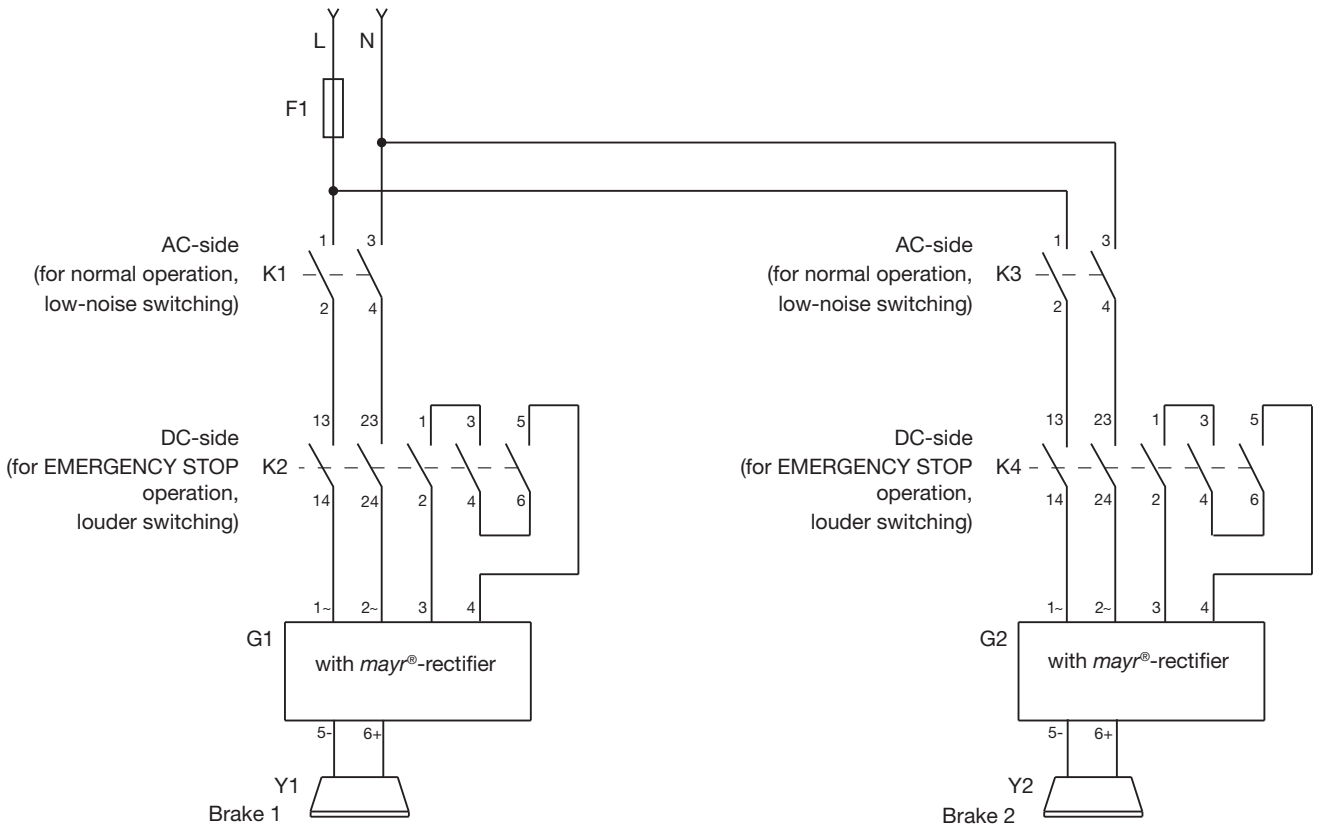

Contactless Release Monitoring

- *Wear-free*
- *Robust*
- *Magnetic field-resistant*
- *Absolutely reliable*

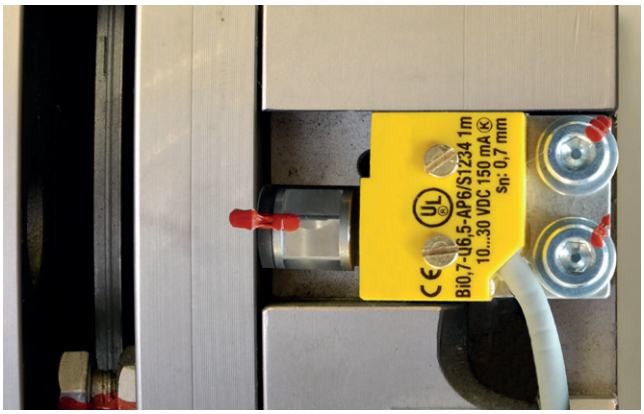

Function

Brakes in passenger elevators are subject to strict technical requirements. They have to guarantee the passengers' safety at all times. An indispensable element for safety brakes fulfilling the DIN EN 81 standard requirements is the integrated function monitoring. This release monitoring prevents unpermitted operating conditions, such as for example the motor starting up against closed brakes.

As an alternative to the tried and tested release monitoring with microswitches, *mayr*® power transmission, as the world-wide leading manufacturer of safety brakes in safety-critical applications such as passenger elevators or vertical axes, offer a contactless system with proximity switches. This fail-safe system with an inductive proximity switch registers the operating condition of the brake and authorises the motor to start up only after release. The contactless release monitoring guarantees maximum functional and operational safety.

Maximum Reliability and Accuracy

As there are no mechanical parts involved, the lifetime of this new, contactless release monitoring system is not dependent on the switching frequency. The system is magnetic field resistant and works absolutely reliably and wear-free. It is also resistant to impacts and vibrations, as there are no movable parts, and the electronics are completely encapsulated. Other advantages of the inductive proximity switch are the high switching point repetitive accuracy, the low hysteresis and the low temperature drift.

The switching bolt for the proximity switch is installed at the factory and is, in contrast to the release monitoring system with microswitch, not adjustable. Application errors through adjustment of the switching point position can be excluded. This feature, too, plays an important role in maximising functional and operational safety.

Optionally NO or NC Contacts

The contactless release monitoring system can be designed either as an NO or NC contact. With the NC contact function, the 'High' signal is generated if the brake is switched when de-energised. Here the armature disk drops and the brake closes. Initiator cable breakage is recognised when the brake is closed.

With the NO contact function, the 'High' signal is generated if the brake is energised and the armature disk releases the rotor. The brake is released. Only on generation of the 'High' signal the motor is enabled for start up. This reliably prevents the motor from starting up against a closed brake. Cable breakage is recognised when the brake is open.

Technical Data

Operating voltage	10 ... 30 VDC
DC rated operating current	≤ 150 mA
Ambient temperature	-25 up to +85 °C
Repetitive accuracy	< 0.015 mm
Hysteresis	< 0.025 mm
Temperature drift (-25 °C to +85 °C)	< +- 0.05 mm
Standard:	PNP NC contact or PNP NO contact,
on request:	NPN NO contact

Wiring Diagram

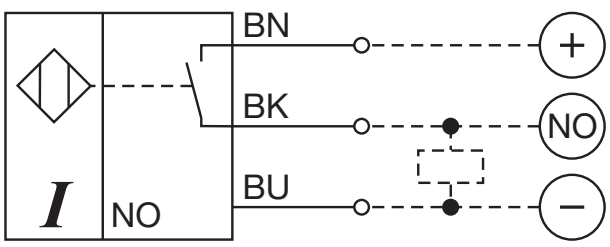

Electrical Accessories – Functions of the DC Voltage Modules

No overexcitation and no power reduction	Overexcitation (short separation time) and / or power reduction (reduction in coil capacity and temperature)			Protection Circuit	Safe Brake Control
	Variable output voltage		Fixed output voltage		
	Without DC-side disconnection	Integrated DC-side disconnection			
					Patented
Type 025.000.6 Bridge Rectifier Page 22	**Type 017._00.2 ROBA®-switch Page 23**		**Type 018.100.2 ROBA®-switch 24V Page 24**	**Type 070.000.6 Spark Quenching Unit Page 25**	**Type 021.100.2 ROBA®-SBCplus Page 26**
Application					
Standard application, preferred for noise-damped brakes Compact design	Allows short separation time		Allows short separation time + short connection time (for input voltage 24 VDC) No wear on contacts	Reductions in switch-off voltage and wear on contacts	Controls and monitors up to two ROBA-stop® safety brakes, especially in applications, which have to fulfill requirements regarding personal protection acc. the standards for functional reliability, such as for example ISO 13849 and IEC 62061

Example

Available: mains voltage 230 VAC
Wanted: short separation time (overexcitation)
Required: supply module / coil nominal voltage

Solution:

- Supply module: Type 017._00.2
- Coil nominal voltage: 104 VDC

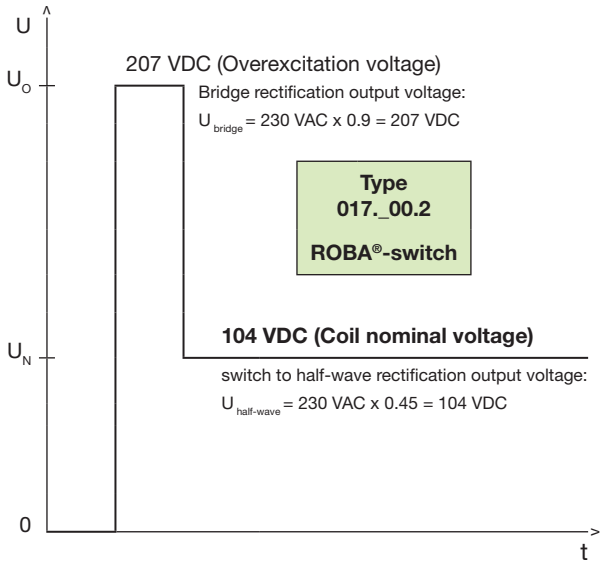

For detailed information on our DC voltage modules, please go to: www.mayr.com

Bridge Rectifier Type 025.000.6

E189728

Application

Rectifiers are used to connect DC consumers to alternating voltage supplies, for example electromagnetic brakes and clutches (ROBA-stop®, ROBA-quick®, ROBATIC®), electromagnets, electrovalves, contactors, switch-on safe DC motors, etc.

Function

The AC input voltage (VAC) is rectified (VDC) in order to operate DC voltage units. Also, voltage peaks, which occur when switching off inductive loads and which may cause damage to insulation and contacts, are limited and the contact load reduced.

Electrical Connection (Terminals)

1 + 2 Input voltage
3 + 4 Connection for an external switch for DC-side switching
5 + 6 Coil
7 – 10 Free nc terminals (only for Size 2)



Dimensions (mm)

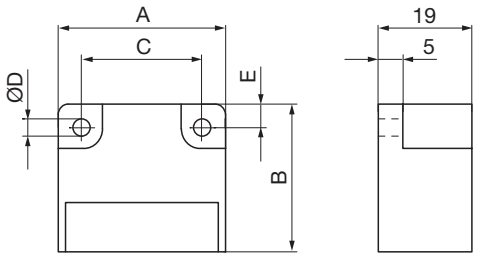

Sizes	A	B	C	ØD	E
1	34	30	25	3.5	4.5
2	54	30	44	4.5	5.0

Accessories: Mounting bracket set for 35 mm rail acc. EN 60715: Article No. 1803201

Order Number

__ / 0 2 5 . 0 0 0 . 6

▲

Sizes
1
2

Technical Data

					Bridge rectifier	
Calculation output voltage					VDC = VAC x 0.9	
Type					**1/025**	**2/025**
Max. input voltage		± 10%	U_{AC}	[VAC]	230	230
Max. output voltage			U_{DC}	[VDC]	207	207
Output current		≤ 50°C	I_{RMS}	[A]	2.5	2.5
		at max. 85 °C	I_{RMS}	[A]	1.7	1.7
Max. coil nominal capacity at	U_{AC} = 115 VAC	≤ 50 °C	P_N	[W]	260	260
		up to 85 °C	P_N	[W]	177	177
	U_{AC} = 230 VAC	≤ 50 °C	P_N	[W]	517	517
		up to 85 °C	P_N	[W]	352	352
	U_{AC} = 400 VAC	≤ 50 °C	P_N	[W]	-	-
		up to 85 °C	P_N	[W]	-	-
	U_{AC} = 500 VAC	≤ 50 °C	P_N	[W]	-	-
		up to 85 °C	P_N	[W]	-	-
	U_{AC} = 600 VAC	≤ 50 °C	P_N	[W]	-	-
		up to 85 °C	P_N	[W]	-	-
Peak reverse voltage				[V]	1600	1600
Rated insulation voltage			U_{RMS}	[V_{RMS}]	320	320
Pollution degree (insulation coordination)					1	1
Device fuses					To be included in the input voltage line.	
Recommended microfuse switching capacity H The microfuse corresponds to the max. possible connection capacity. If fuses are used corresponding to the actual capacities, the permitted limit integral I^2t must be observed on selection.					FF 3.15 A	FF 3.15 A
Permitted limit integral			I^2t	[A^2s]	40	40
Protection					IP65 components, encapsulated / IP20 terminals	
Terminals					Cross-section 0.14 – 1.5 mm² (AWG 26-14)	
Ambient temperature				[°C]	-25 to +85	
Storage temperature				[°C]	-40 to +85	
Conformity markings					UL, CE	UL, CE
Installation conditions					The installation position can be user-defined. Please ensure sufficient heat dissipation and air convection! Do not install near to sources of intense heat!	

ROBA®-switch Type 017._00.2

E189728

Application

ROBA®-switch fast acting rectifiers are used to connect DC consumers to alternating voltage supplies, for example electromagnetic brakes and clutches (ROBA-stop®, ROBA®-quick, ROBATIC®) as well as electromagnets, electrovalves, etc.

Fast acting rectifier ROBA®-switch 017._00.2

- Consumer operation with overexcitation or power reduction
- Input voltage: 100 – 500 VAC
- Maximum output current I_{RMS}: 3 A at 250 VAC
- UL-approved

Function

The ROBA®-switch is used for operation at an input voltage of between 100 and 500 VAC, depending on the size. It can switch internally from bridge rectification output voltage to half-wave rectification output voltage. The bridge rectification time can be modified from 0.05 to 2 seconds by exchanging the external resistor (R_{ext}).

Electrical Connection (Terminals)

1 + 2	Input voltage (fitted protective varistor)
3 + 4	Connection for external contact for DC-side switch-off
5 + 6	Output voltage (fitted protective varistor)
7 + 8	R_{ext} for bridge rectification time adjustment

Technical Data

Input voltage	see Table 1
Output voltage	see Table 1
Protection	IP65 components, IP20 terminals, IP10 R_{ext}
Terminal nom. cross-section	1.5 mm² (AWG 22-14)
Ambient temperature	-25 °C up to +70 °C
Storage temperature	-40 °C up to +70 °C

ROBA®-switch Sizes, Table 1

			Sizes			
			Type 017.000.2		Type 017.100.2	
			10	20	10	20
Input voltage ± 10%	U_{AC}	[VAC]	100–250	200–500	100–250	200–500
Output voltage	U_{bridge}	[VDC]	90–225	180–450	90–225	180–450
	$U_{half\text{-}wave}$	[VDC]	45–113	90–225	45–113	90–225
Output current						
at ≤ 45 °C	I_{RMS}	[A]	2.0	1.8	3.0	2.0
at max. 70 °C	I_{RMS}	[A]	1.0	0.9	1.5	1.0
Conformity markings			cULus CE	cULus up to 300 V CE	cULus CE	cULus CE

Order Number

__ / 0 1 7 . __ 0 0 . 2

Sizes	UL-approved
10	0 up to 300 V
20	1 up to 500 V



Dimensions (mm)

Type 017.000.2

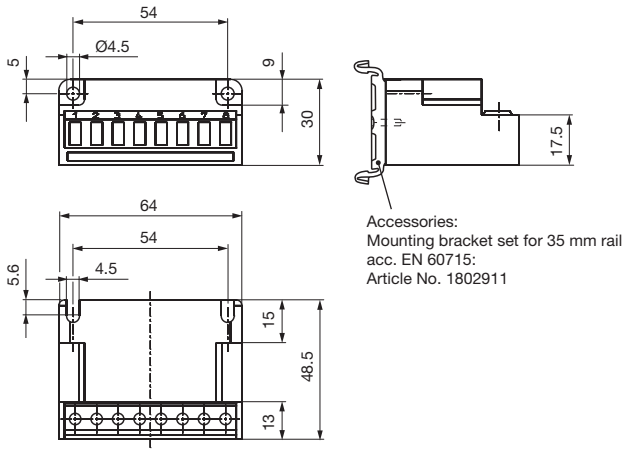

Accessories:
Mounting bracket set for 35 mm rail acc. EN 60715:
Article No. 1802911

Type 017.100.2

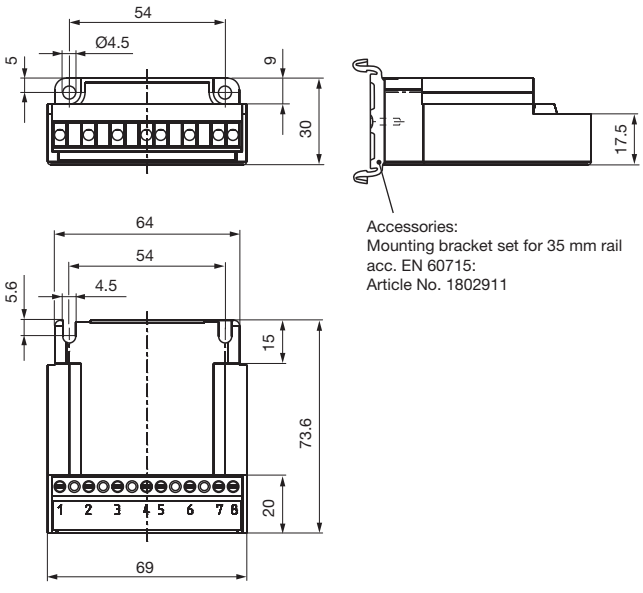

Accessories:
Mounting bracket set for 35 mm rail acc. EN 60715:
Article No. 1802911

ROBA®-switch 24V Type 018.100.2

E189728

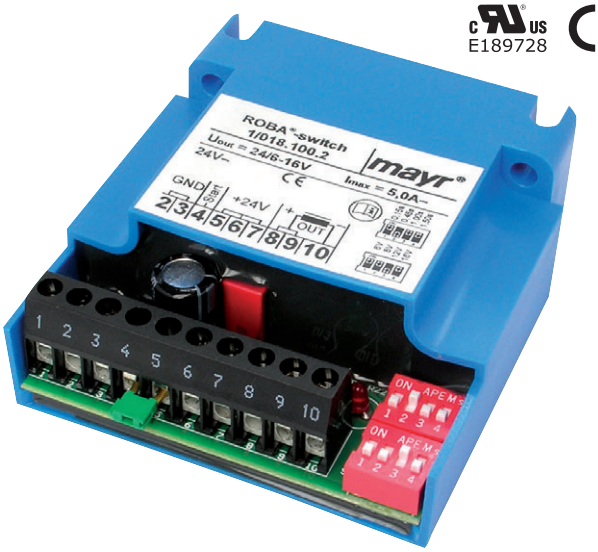

Application

ROBA®-switch 24V fast switching modules are used to operate DC consumers with overexcitation or power reduction, for example electromagnetic brakes and clutches (ROBA-stop®, ROBA®-quick, ROBATIC®), electromagnets, electrovalves, etc.

Fast switching module ROBA®-switch 24V 018.100.2

- Consumer operation with overexcitation or power reduction
- Integrated DC-side disconnection (shorter connection time t_1)
- Input voltage: 24 VDC
- Max. output current I_{RMS}: 5 A
- UL-approved

The ROBA®-switch 24V with integrated DC-side disconnection is not suitable for being the only safety disconnection in applications!

Function

The ROBA®-switch 24V units are used for an input voltage of 24 VDC. They can switch internally, meaning that the output voltage switches to holding voltage from the input voltage (=overexcitation voltage) via pulse-width modulation using 20 kHz. The overexcitation time can be adjusted via a DIP switch to 150 ms, 450 ms, 1 s, 1.5 s and 2.15 s. The holding voltage can be adjusted via a further DIP switch to ¼, ⅓, ½ and ⅔ of the input voltage (equals 6 V, 8 V, 12 V and 16 V at an input voltage of 24 V).

In addition, the ROBA®-switch 24V features integrated DC-side disconnection. In contrast to the usual DC-side disconnection, no further protective measures or external components are required. The DC-side disconnection is activated in standard mode and causes short switching times on the electromagnetic consumer. This can, however, be deactivated by installing a bridge between terminals 7 and 8 in order to produce soft brakings and quieter switching noises. However, this substantially lengthens the switching times (approx. 6 – 10x).

Electrical Connection (Terminals)

2 + 3	Input voltage, ground
4	Control input
5 – 7	Input voltage +24 VDC
8 + 9	Output voltage +
10	Output voltage -

Technical Data

Input voltage U_I	24 VDC +20 % / -10 % SELV/PELV
Output voltage U_O	Input voltage U_I
Output voltage U_H	¼, ⅓, ½, ⅔ x U_I ±20 %
Output current I_{RMS} at ≤ 45 °C	5.0 A
Output current I_{RMS} at max. 70 °C	2.5 A
Protection	IP00
Terminal nominal cross-section	1.5 mm² (AWG 22-14)
Ambient temperature	-25 °C up to +70 °C
Storage temperature	-40 °C up to +70 °C

Dimensions (mm)

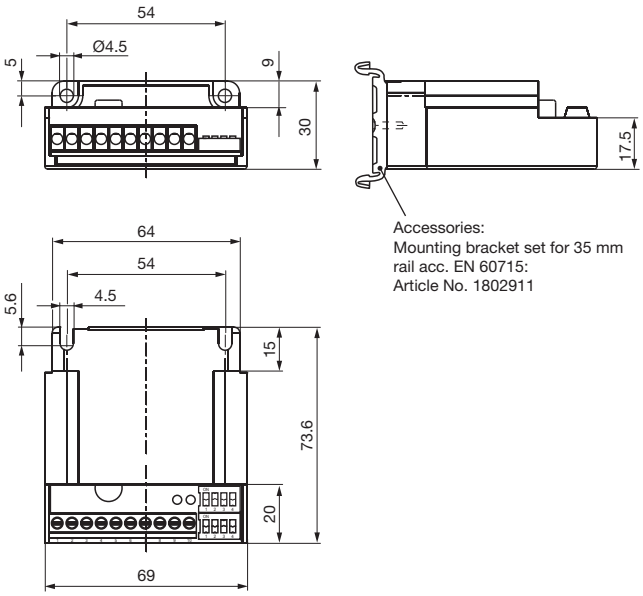

Accessories:
Mounting bracket set for 35 mm rail acc. EN 60715:
Article No. 1802911

Order Number

__	/	0	1	8	.	1	0	0	.	2
▲										
Size 1										

Spark Quenching Unit Type 070.000.6

E189728

Application

Reduces spark production on the switching contacts occurring during DC-side switch-off of inductive loads.

- Voltage limitation according to VDE 0580 2000-07, Item 4.6.
- Reduction of EMC-disturbance by voltage rise limitation, suppression of switching sparks.
- Reduction of brake engagement times by a factor of 2 – 4 compared to freewheeling diodes.

Function

The spark quenching unit will absorb voltage peaks resulting from inductive load switching, which can cause damage to insulation and contacts. It limits these to 70 V and reduces the contact load. Switching products with a contact opening distance of > 3 mm are suitable for this purpose.

Electrical Connection (Terminals)

1 (+)	Input voltage
2 (–)	Input voltage
3 (–)	Coil
4 (+)	Coil
5	Free nc terminal
6	Free nc terminal

Technical Data

Input voltage	max. 300 VDC, max. 615 V_{peak} (rectified voltage 400 VAC, 50/60 Hz)
Switch-off energy	max. 9J/2 ms
Power dissipation	max. 0.1 Watt
Rated voltage nc terminals	250 V
Protection	IP65, IP20 terminals
Ambient temperature	-25 °C up to +85 °C
Storage temperature	-40 °C up to +85 °C
Max. conductor cross-section	2.5 mm², (AWG 26-12)
Max. terminal tightening torque	0.5 Nm

Accessories

Mounting bracket set for 35 mm rail acc. EN 60715:
Article No. 1803201

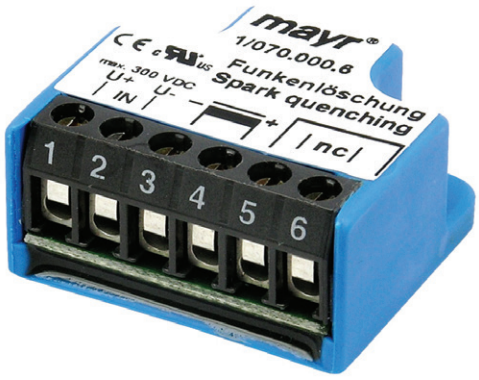

Dimensions (mm)

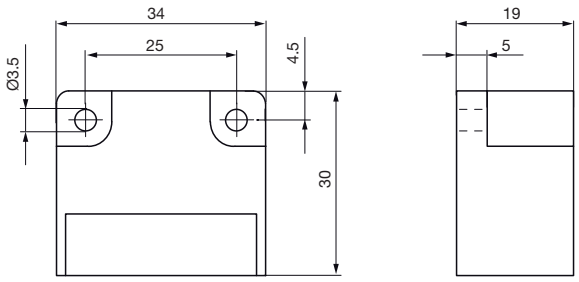

Order Number

__ / 0 7 0 . 0 0 0 . 6
▲
Size
1

The safe brake control ROBA®-SBCplus Type 021.100.2

CE

Technical Data

Electrical connection

Supply voltage logic	24VDC -15 % / +20%
Supply voltage power	24 VDC or 48 VDC -10 % / +20%

Inputs

Safe inputs	4 (Y10 – Y23)
Standard inputs	4 (S35, S36, Y1, Y2)
Monitoring times	30 ms ... 4000 ms

Outputs

Supply voltage S11	24 V 0.1 A
Acknowledgement outputs	24 V 0.1 A O3 fault message O4 Status circuit 1 O5 Status circuit 2
Test pulse outputs	T0, T1, 24 V, 0.1 A
Power outputs	O1, O2
Continuous operation	24 V 2 x 5.5 A max.
Continuous operation	48 V 2 x 2.75 A max.
Overexcitation	24 V 2 x 6.5 A max.
Overexcitation	48 V 2 x 3.25 A max.

Reduced voltages	6/8/12/16/24/32 V ±10 %
Overexcitation times	100 ms ... 2500 ms
Cycle frequency	4/min max.
Ambient temperature	0 – 45 °C
Protection	IP20
Installation into control cabinet	IP54
Dimensions	45×100×120 mm
Connection terminal	0.20 – 2.5 mm², 24 – 12AWG
Clamping terminals per connection	2

Certification

Type examination tested by TÜV (German Technical Inspectorate), CE, UL

Function

- Safe control of 2 independent brakes
- Release monitoring via proximity switch or microswitch
- Fast or slow brake switch-off
- Safe monitoring of the switching times
- Parameterisation of the values
- Programmed and validated safety functions
- Safe signal output to the higher-level switching condition control

Application Example

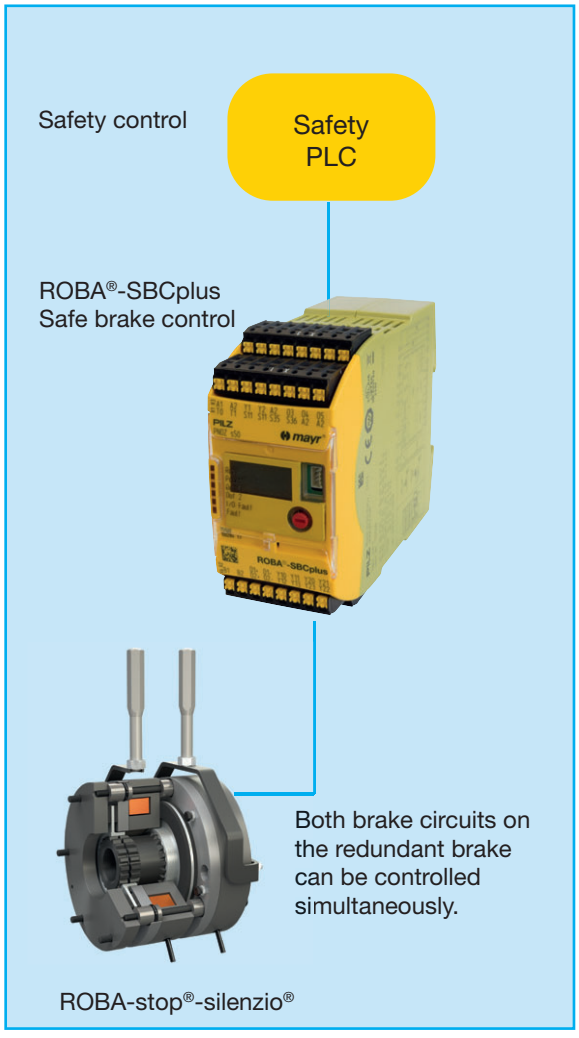

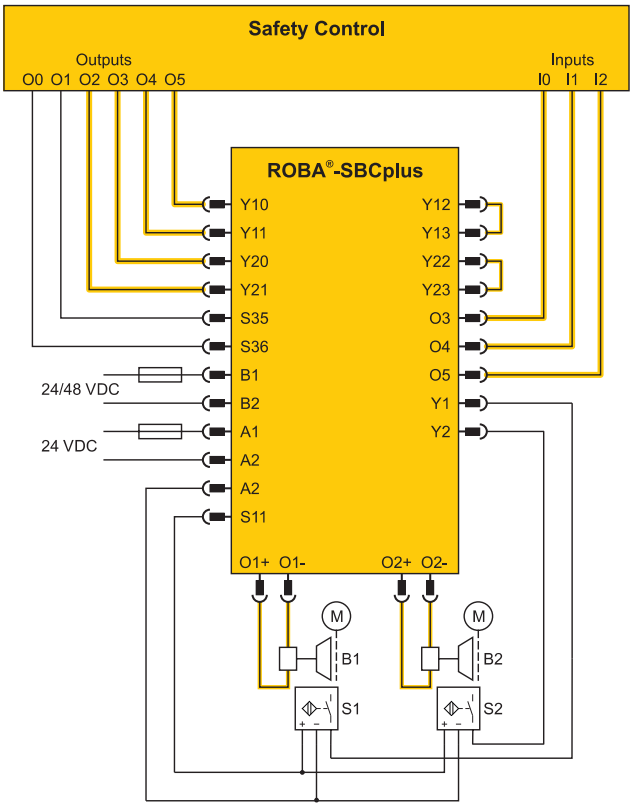

ROBA-stop®-silenzio® – Guidelines for Brakes with Type Examination Certificate

Guidelines on the Declaration of Conformity: A conformity evaluation has been carried out for the product (electromagnetic safety brake) in terms of the EU Low Voltage Directive 2014/35/EU and RoHS 2011/65/EU with 2015/863/EU. The Declaration of Conformity is laid out in writing in a separate document and can be requested if required.
Guidelines on the EMC Directive (2014/30/EU): The product cannot be operated independently according to the EMC directive. Due to their passive state, brakes are also non-critical equipment according to the EMC. Only after integration of the product into an overall system can this be evaluated in terms of the EMC. For electronic equipment, the evaluation has been verified for the individual product in laboratory conditions, but not in the overall system.
Guidelines on the Machinery Directive (2006/42/EC): The product is a component for installation into machines according to the Machinery Directive 2006/42/EC. The brakes can fulfil the specifications for safety-related applications in connection with other elements. The type and scope of the required measures result from the machine risk analysis. The brake then becomes a machine component and the machine manufacturer assesses the conformity of the safety device to the directive. It is forbidden to start use of the product until you have ensured that the machine accords with the regulations stated in the directive.
Guidelines on the ATEX Directive: Without a conformity evaluation, this product is not suitable for use in areas where there is a high danger of explosion. For application of this product in areas where there is a high danger of explosion, it must be classified and marked according to directive 2014/34/EU.

Safety Regulations

Brakes may generate several risks, among others:



During the risk assessment, the dangers involved must be evaluated and removed by taking appropriate protective measures.
To prevent injury or damage, only specialist personnel are allowed to work on the components. They must be familiar with the dimensioning, transport, installation, inspection of the brake equipment, initial operation, maintenance and disposal according to the relevant standards and regulations.

Application Conditions

The catalogue values are guideline values which have been determined in test facilities. It may be necessary to carry out your own tests for the intended application.
When dimensioning the brakes, please remember that installation situations, braking torque fluctuations, permitted friction work, bedding-in condition / conditioning of the brake linings and wear as well as general ambient conditions can all affect the given values. These factors should therefore be carefully assessed, and alignments made accordingly.

- ❒ Mounting dimensions and connection dimensions must be adjusted according to the size of the brake at the place of installation.
- ❒ The brakes are designed for a relative duty cycle of 60 %. A duty cycle > 60 % leads to higher temperatures, which cause premature ageing of the noise damping and therefore lead to an increase in switching noises.
- ❒ The braking torque is dependent on the bedding-in condition of the brake. Bedding in / conditioning of the friction linings is necessary.
- ❒ The brakes are only designed for dry running. The torque is lost if the friction surfaces come into contact with oil, grease, water or similar substances or foreign bodies.
- ❒ Manufacturer-side corrosion protection of the metallic surfaces.
- ❒ The rotors may rust up and seize up in corrosive ambient conditions and/or after longer downtimes.

Ambient Temperature -5 °C up to +40 °C

Protection

(mechanical) IP10 (without cover): Protection against large body surfaces and large foreign bodies > 50 mm in diameter.
No protection against water.

(mechanical) IP20 (only for design with cover, in the area of the rotor): Protection against fingers or similar-sized objects, against medium-sized foreign bodies > 12 mm in diameter. No protection against water.

(electrical) IP54: Dust-proof and protected against contact as well as against water spray from any direction.

Intended Use

This safety brake is intended for use in electrically operated elevators and goods elevators. Furthermore, this brake can be used as a braking device acting on the traction sheave or the shaft of the traction sheave, as part of the protection device against overspeed for the car moving in upwards direction and as a braking element against unintended car movement.

Guidelines for Electromagnetic Compatibility (EMC)

In accordance with the EMC directives 2014/30/EU, the individual components produce no emissions. However, functional components e.g. mains-side energisation of the brakes with rectifiers, phase demodulators, ROBA®-switch devices or similar controls can produce disturbance which lies above the allowed limit values. For this reason it is important to read the Installation and Operational Instructions very carefully and to keep to the EMC Directives.

Standards, Directives and Regulations Used and To Be Applied

VDE 0580	Electromagnetic devices and components, general specifications
2014/35/EU	Low Voltage Directive
2011/65/EU	RoHS II - Directive
2015/863/EU	RoHS III- Directive
CSA C22.2 No. 14-2010	Industrial Control Equipment
UL 508 (Edition 17)	Industrial Control Equipment
2014/33/EU	Elevator Directive
EN 81-20	Safety rules for the construction and installation of lifts –Part 20: Passenger and goods passenger lifts
EN 81-50	Safety rules for the construction and installation of lifts - Examinations and tests – Part 50: Design rules, calculations, examinations and tests of lift components
DGUV Rule 115-02	(previously BGV C1) Safety regulations for theatre stage technical systems
DIN EN 17206	(previously DIN 56950-1) Entertainment technology - Lifting and load-bearing equipment for stages and other production areas in the entertainment industry - Specifications for general requirements
EN ISO 12100	Safety of machinery – General principles for design - Risk assessment and risk reduction
EN 61000-6-4	Interference emission
EN 12016	Interference immunity (for elevators, escalators and moving walkways)

Liability

- The information, guidelines and technical data in these documents were up to date at the time of printing. Demands on previously delivered brakes are not valid.
- Liability for damage and operational malfunctions will not be taken if:
  - the Installation and Operational Instructions are ignored or neglected.
  - the brakes are used inappropriately.
  - the brakes are modified.
  - the brakes are worked on unprofessionally.
  - the brakes are handled or operated incorrectly.

Headquarters

Chr. Mayr GmbH + Co. KG
Eichenstraße 1, D-87665 Mauerstetten
Tel.: +49 83 41/8 04-0, Fax: +49 83 41/80 44 21
www.mayr.com, E-Mail: public.mayr@mayr.com

mayr®
your reliable partner

Service Germany/Austria

Baden-Württemberg
Esslinger Straße 7
70771 Leinfelden-Echterdingen
Tel.: 07 11/78 26 26 40
Fax: 07 11/78 26 26 39

Bavaria
Industriestraße 51
82194 Gröbenzell
Tel.: 0 81 42/50 19 808

Chemnitz
Bornaer Straße 205
09114 Chemnitz
Tel.: 03 71/4 74 18 96
Fax: 03 71/4 74 18 95

Franken
Unterer Markt 9
91217 Hersbruck
Tel.: 0 91 51/81 48 64
Fax: 0 91 51/81 62 45

Kamen
Herbert-Wehner-Straße 2
59174 Kamen
Tel.: 0 23 07/24 26 79
Fax: 0 23 07/24 26 74

North
Schiefer Brink 8
32699 Extertal
Tel.: 0 57 54/9 20 77
Fax: 0 57 54/9 20 78

Rhine-Main
Kohlhäuser Str. 3-5
36043 Fulda
Tel.: 06 61/96 21 02 15

Austria
Pummerinplatz 1, TIZ I, A27
4490 St. Florian, Austria
Tel.: 0 72 24/2 20 81-12
Fax: 0 72 24/2 20 81 89

Branch office

China
Mayr Zhangjiagang
Power Transmission Co., Ltd.
Fuxin Road No.1298, Yangshe Town
215637 Zhangjiagang
Tel.: 05 12/58 91-75 67
Fax: 05 12/58 91-75 66
info@mayr-ptc.cn

France
Mayr France S.A.S.
Z.A.L. du Minopole
Rue Nungesser et Coli
62160 Bully-Les-Mines
Tel.: 03.21.72.91.91
Fax: 03.21.29.71.77
contact@mayr.fr

Great Britain
Mayr Transmissions Ltd.
Valley Road, Business Park
Keighley, BD21 4LZ
West Yorkshire
Tel.: 0 15 35/66 39 00
Fax: 0 15 35/66 32 61
sales@mayr.co.uk

Italy
Mayr Italia S.r.l.
Viale Veneto, 3
35020 Saonara (PD)
Tel.: 049/879 10 20
Fax: 049/879 10 22
info@mayr-italia.it

Japan
Mayr Japan LLC
Higano Nihonbashi Building 2F,
1-1-9 Nihonbashi Kakigara-cho,
Chuo-ku Tokyo, 103-0014 Japan
Tel.: 03/35 27-29 00
Fax: 03/35 27-26 61
public.mayr@mayr.co.jp

Singapore
Mayr Transmission (S) PTE Ltd.
No. 8 Boon Lay Way Unit 03-06,
TradeHub 21
Singapore 609964
Tel.: 00 65/65 60 12 30
Fax: 00 65/65 60 10 00
info@mayr.com.sg

Switzerland
Mayr Kupplungen AG
Tobeläckerstraße 11
8212 Neuhausen am Rheinfall
Tel.: 0 52/6 74 08 70
Fax: 0 52/6 74 08 75
info@mayr.ch

USA
Mayr Corporation
10 Industrial Avenue
Mahwah
NJ 07430
Tel.: 2 01/4 45-72 10
Fax: 2 01/4 45-80 19
info@mayrcorp.com

Representatives

Australia
Drive Systems Pty Ltd.
8/32 Melverton Drive
Hallam, Victoria 3803
Australien
Tel.: 0 3/97 96 48 00
info@drivesystems.com.au

India
National Engineering
Company (NENCO)
J-225, M.I.D.C.
Bhosari Pune 411026
Tel.: 0 20/27 13 00 29
Fax: 0 20/27 13 02 29
nenco@nenco.org

Netherlands
Groneman BV
Amarilstraat 11
7554 TV Hengelo OV
Tel.: 074/2 55 11 40
Fax: 074/2 55 11 09
aandrijftechniek@groneman.nl

Poland
Wamex Sp. z o.o.
ul. Pozaryskiego, 28
04-703 Warszawa
Tel.: 0 22/6 15 90 80
Fax: 0 22/8 15 61 80
wamex@wamex.com.pl

South Korea
Mayr Korea Co. Ltd.
15, Yeondeok-ro 9beon-gil
Seongsan-gu
51571 Changwon-si
Gyeongsangnam-do. Korea
Tel.: 0 55/2 62-40 24
Fax: 0 55/2 62-40 25
info@mayrkorea.com

Taiwan
German Tech
Component Co., Ltd.
No.10-3, Ln. 358, Sec. 1,
Hemu Rd., Shengang Dist.,
429012 Taichung City
Tel.: +886 (4) 25150566
Fax: +886 (4) 25152413
abby@zfgta.com.tw

Czech Republic
BMC - TECH s.r.o.
Hviezdoslavova 29 b
62700 Brno
Tel.: 05/45 22 60 47
Fax: 05/45 22 60 48
info@bmc-tech.cz

Turkey
Representative Office Turkey
Kucukbakkalkoy Mah.
Brandium Residence R2
Blok D:254
34750 Atasehir - Istanbul, Turkey
Tel.: 02 16/2 32 20 44
Fax: 02 16/5 04 41 72
info@mayr.com.tr

More representatives:

Belgium, Brazil, Canada, Colombia, Croatia, Denmark, Finland, Greece, Hongkong, Hungary, Indonesia, Israel, Luxembourg, Malaysia, Mexico,New Zealand, Norway, Philippines, Portugal, Romania, Russia, Slovakia, Slovenia, South Africa, Spain, Sweden, Thailand

You can find the complete contact details for the representative responsible for your area in the Contact section at www.mayr.com

16/12/2021
BK/BE/GC/SL/LI