Nidec
All for dreams

User Guide

SI-Interbus 500 kBd
SI-Interbus 2 MBd

Part Number: 0478-0614-01
Issue Number: 1

Original Instructions

For the purposes of compliance with the EU Machinery Directive 2006/42/EC, the English version of this manual is the Original Instructions. Manuals in other languages are Translations of the Original Instructions.

Documentation

Manuals are available to download from the following locations: **http://www.drive-setup.com/ctdownloads**

The information contained in this manual is believed to be correct at the time of printing and does not form part of any contract. The manufacturer reserves the right to change the specification of the product and its performance, and the contents of the manual, without notice.

Warranty and Liability

In no event and under no circumstances shall the manufacturer be liable for damages and failures due to misuse, abuse, improper installation, or abnormal conditions of temperature, dust, or corrosion, or failures due to operation outside the published ratings. The manufacturer is not liable for consequential and incidental damages. Contact the supplier of the drive for full details of the warranty terms.

Environmental policy

Control Techniques Ltd operates an Environmental Management System (EMS) that conforms to the International Standard ISO 14001.

Further information on our Environmental Policy can be found at: **http://www.drive-setup.com/environment**

Restriction of Hazardous Substances (RoHS)

The products covered by this manual comply with European and International regulations on the Restriction of Hazardous Substances including EU directive 2011/65/EU and the Chinese Administrative Measures for Restriction of Hazardous Substances in Electrical and Electronic Products.

Disposal and Recycling (WEEE)

When electronic products reach the end of their useful life, they must not be disposed of along with domestic waste but should be recycled by a specialist recycler of electronic equipment. Control Techniques products are designed to be easily dismantled into their major component parts for efficient recycling. The majority of materials used in the product are suitable for recycling.

Product packaging is of good quality and can be re-used. Large products are packed in wooden crates. Smaller products are packaged in strong cardboard cartons which have a high recycled fibre content. Cartons can be re-used and recycled. Polythene, used in protective film and bags for wrapping the product, can be recycled. When preparing to recycle or dispose of any product or packaging, please observe local legislation and best practice.

REACH legislation

EC Regulation 1907/2006 on the Registration, Evaluation, Authorisation and restriction of Chemicals (REACH) requires the supplier of an article to inform the recipient if it contains more than a specified proportion of any substance which is considered by the European Chemicals Agency (ECHA) to be a Substance of Very High Concern (SVHC) and is therefore listed by them as a candidate for compulsory authorisation.

Further information on our compliance with REACH can be found at: **http://www.drive-setup.com/reach**

Registered Office

Nidec Control Techniques Ltd
The Gro
Newtown
Powys
SY16 3BE
UK
Registered in England and Wales. Company Reg. No. 01236886.

Copyright

The contents of this publication are believed to be correct at the time of printing. In the interests of a commitment to a policy of continuous development and improvement, the manufacturer reserves the right to change the specification of the product or its performance, or the contents of the guide, without notice.

All rights reserved. No parts of this guide may be reproduced or transmitted in any form or by any means, electrical or mechanical including photocopying, recording or by an information storage or retrieval system, without permission in writing from the publisher.

Copyright © 16 October 2019 Nidec Control Techniques Ltd

Contents

1 Safety information 7
1.1 Warnings, cautions and notes 7
1.2 Important safety information. Hazards. Competence of designers and installers 7
1.3 Responsibility 7
1.4 Compliance with regulations 7
1.5 Electrical hazards 8
1.6 Stored electrical charge 8
1.7 Mechanical hazards 8
1.8 Access to equipment 9
1.9 Environmental limits 9
1.10 Hazardous environments 9
1.11 Motor 9
1.12 Mechanical brake control 9
1.13 Adjusting parameters 9
1.14 Electromagnetic compatibility (EMC) 9

2 Introduction 10
2.1 General 10
2.2 Identification 10
2.3 Date code format 11
2.4 Terminology 11

3 Supported features 12

4 Mechanical installation 13
4.1 General installation 13
4.2 Installation on Unidrive M200 to M400 and Commander C200 / C300 (frames 5 to 9) 14
4.3 Installation on Unidrive M600 to M702 15
4.4 Installation on Digitax HD 16

5 Electrical installation 17
5.1 Interbus cable 19
5.2 SI-Interbus cable shield connections 19
5.3 Interbus network termination 19
5.4 Maximum network length 19

6 Getting started 20
6.1 Node address 20
6.2 Communication data rate 20
6.3 Parameter reference 20
6.4 Configuring the cyclic data 20

7 Additional features 29
7.1 Load module default parameters 29
7.2 Store option parameters 29
7.3 Module reset 30
7.4 Restore saved option parameters 30
7.5 Reset all option modules 30
7.6 Saving drive parameters 31

8 Non-Cyclic data 32
8.1 Mode 1 - CT Single Word mode 32
8.2 Mode 2 - PPO 4 Word mode 46
8.3 Mode 3 - Peripheral Communications Protocol V2.0 54

9 Virtual menus 58
9.1 Pr 60.01 to Pr 60.56 (Setup menu shortcut) 58
9.2 Pr 61.01 (Parameter 0 access) 58
9.3 Pr 61.40 (Event trigger - lowest slot) 58
9.4 Pr 61.41 (Event trigger – slot 1) 58
9.5 Pr 61.42 (Event trigger – slot 2) 58
9.6 Pr 61.43 (Event trigger – slot 3) 59
9.7 Pr 61.50 (CT Single Word - mode 1 non-cyclic) 59
9.8 Pr 61.51 (PPO 4 Word – mode 2 non-cyclic) 59

10 SI-Applications parameters 60
10.1 Single SI-Applications fitted 60
10.2 Dual SI-Applications fitted 61

11 Control / status word 62
11.1 Control word 62
11.2 Status word 64

12 Diagnostics 65
12.1 Module ID code 65
12.2 Firmware version 65
12.3 Interbus operating status 65
12.4 SI-Interbus serial number 66
12.5 Cyclic data mapping status 66
12.6 Module error status 68
12.7 Background cycles per second 68
12.8 PCB temperature 69
12.9 Hardware version 69
12.10 Date code 69
12.11 Status LEDs 70
12.12 LED operating sequence 71

13 Single line setup parameter descriptions 72

14 Full parameter descriptions 74

14.1 Module ID 75
14.2 Firmware version 75
14.3 Interbus data format 75
14.4 Interbus operating status 76
14.5 Network loss timeout 76
14.6 Direct data mapping 77
14.7 Cyclic input mapping 77
14.8 Cyclic output mapping 77
14.9 Default option parameters 78
14.10 Save option parameters 78
14.11 Module reset 79
14.12 Use saved option parameters 79
14.13 Data compression enable 79
14.14 Serial number LS 80
14.15 Cyclic mapping status 80
14.16 Module status 80
14.17 Background cycles 81
14.18 PCB temperature 81
14.19 Hardware version 81
14.20 Serial number MS 81
14.21 Manufacture date code 82

15 CMD tool support files 83

15.1 Interbus CMD tool 83
15.2 CMD tool configuration formats 83

16 Glossary of terms 85

1 Safety information

1.1 Warnings, cautions and notes

WARNING

A **Warning** contains information, which is essential for avoiding a safety hazard.

CAUTION

A **Caution** contains information, which is necessary for avoiding a risk of damage to the product or other equipment.

NOTE A **Note** contains information, which helps to ensure correct operation of the product.

1.2 Important safety information. Hazards. Competence of designers and installers

This guide applies to products which control electric motors either directly (drives) or indirectly (controllers, option modules and other auxiliary equipment and accessories). In all cases the hazards associated with powerful electrical drives are present, and all safety information relating to drives and associated equipment must be observed.

Specific warnings are given at the relevant places in this guide.

Drives and controllers are intended as components for professional incorporation into complete systems. If installed incorrectly they may present a safety hazard. The drive uses high voltages and currents, carries a high level of stored electrical energy, and is used to control equipment which can cause injury. Close attention is required to the electrical installation and the system design to avoid hazards either in normal operation or in the event of equipment malfunction. System design, installation, commissioning/ start-up and maintenance must be carried out by personnel who have the necessary training and competence. They must read this safety information and this guide carefully.

1.3 Responsibility

It is the responsibility of the installer to ensure that the equipment is installed correctly with regard to all instructions given in this guide. They must give due consideration to the safety of the complete system, so as to avoid the risk of injury both in normal operation and in the event of a fault or of reasonably foreseeable misuse.

The manufacturer accepts no liability for any consequences resulting from inappropriate, negligent or incorrect installation of the equipment.

1.4 Compliance with regulations

The installer is responsible for complying with all relevant regulations, such as national wiring regulations, accident prevention regulations and electromagnetic compatibility (EMC) regulations. Particular attention must be given to the cross-sectional areas of conductors, the selection of fuses or other protection, and protective ground (earth) connections.

This guide contains instructions for achieving compliance with specific EMC standards.

All machinery to be supplied within the European Union in which this product is used must comply with the following directives:

2006/42/EC Safety of machinery.

2014/30/EU: Electromagnetic Compatibility.

1.5 Electrical hazards

The voltages used in the drive can cause severe electrical shock and/or burns, and could be lethal. Extreme care is necessary at all times when working with or adjacent to the drive. Hazardous voltage may be present in any of the following locations:

- AC and DC supply cables and connections
- Output cables and connections
- Many internal parts of the drive, and external option units

Unless otherwise indicated, control terminals are single insulated and must not be touched.

The supply must be disconnected by an approved electrical isolation device before gaining access to the electrical connections.

The STOP and Safe Torque Off functions of the drive do not isolate dangerous voltages from the output of the drive or from any external option unit.

The drive must be installed in accordance with the instructions given in this guide. Failure to observe the instructions could result in a fire hazard.

1.6 Stored electrical charge

The drive contains capacitors that remain charged to a potentially lethal voltage after the AC supply has been disconnected. If the drive has been energized, the AC supply must be isolated at least ten minutes before work may continue.

1.7 Mechanical hazards

Careful consideration must be given to the functions of the drive or controller which might result in a hazard, either through their intended behaviour or through incorrect operation due to a fault. In any application where a malfunction of the drive or its control system could lead to or allow damage, loss or injury, a risk analysis must be carried out, and where necessary, further measures taken to reduce the risk - for example, an over-speed protection device in case of failure of the speed control, or a fail-safe mechanical brake in case of loss of motor braking.

With the sole exception of the Safe Torque Off function, none of the drive functions must be used to ensure safety of personnel, i.e. they must not be used for safety-related functions.

The Safe Torque Off function may be used in a safety-related application. The system designer is responsible for ensuring that the complete system is safe and designed correctly according to the relevant safety standards.

The design of safety-related control systems must only be done by personnel with the required training and experience. The Safe Torque Off function will only ensure the safety of a machine if it is correctly incorporated into a complete safety system. The system must be subject to a risk assessment to confirm that the residual risk of an unsafe event is at an acceptable level for the application.

1.8 Access to equipment

Access must be restricted to authorized personnel only. Safety regulations which apply at the place of use must be complied with.

1.9 Environmental limits

Instructions in this guide regarding transport, storage, installation and use of the equipment must be complied with, including the specified environmental limits. This includes temperature, humidity, contamination, shock and vibration. Drives must not be subjected to excessive physical force.

1.10 Hazardous environments

The equipment must not be installed in a hazardous environment (i.e. a potentially explosive environment).

1.11 Motor

The safety of the motor under variable speed conditions must be ensured.

To avoid the risk of physical injury, do not exceed the maximum specified speed of the motor.

Low speeds may cause the motor to overheat because the cooling fan becomes less effective, causing a fire hazard. The motor should be installed with a protection thermistor. If necessary, an electric forced vent fan should be used.

The values of the motor parameters set in the drive affect the protection of the motor. The default values in the drive must not be relied upon. It is essential that the correct value is entered in the Motor Rated Current parameter.

1.12 Mechanical brake control

Any brake control functions are provided to allow well co-ordinated operation of an external brake with the drive. While both hardware and software are designed to high standards of quality and robustness, they are not intended for use as safety functions, i.e. where a fault or failure would result in a risk of injury. In any application where the incorrect operation of the brake release mechanism could result in injury, independent protection devices of proven integrity must also be incorporated.

1.13 Adjusting parameters

Some parameters have a profound effect on the operation of the drive. They must not be altered without careful consideration of the impact on the controlled system. Measures must be taken to prevent unwanted changes due to error or tampering.

1.14 Electromagnetic compatibility (EMC)

Installation instructions for a range of EMC environments are provided in the relevant Power Installation Guide. If the installation is poorly designed or other equipment does not comply with suitable standards for EMC, the product might cause or suffer from disturbance due to electromagnetic interaction with other equipment. It is the responsibility of the installer to ensure that the equipment or system into which the product is incorporated complies with the relevant EMC legislation in the place of use.

2 Introduction

2.1 General

The SI-Interbus option module allows a Control Techniques drive to be connected to an Interbus network and operate as an Interbus slave device. It will allow transfer of up to 10 x 16-bit cyclic input data and 10 x 16-bit cyclic output data between the local drive (and its option modules), and external devices on the Interbus network.

The SI-Interbus module can be fitted to any one of the expansion slots in the Unidrive M200 to M400, Unidrive M600/M7XX, Digitax HD or Commander C200/C300.

2.2 Identification

The SI-Interbus option module can be identified by:

- The label located on the top of the option module (**Table 2-1** ***SI-Interbus top label (500 kBd and 2 MBd)***)
- The colour of the front bezel (Grey)

Figure 2-1 SI-Interbus option module (2 MBd)

Table 2-1 shows sample module labels that would be fitted to the SI-Interbus modules

Table 2-1 SI-Interbus top label (500 kBd and 2 MBd)

SI-Interbus 500 kBd 82400000021220 S/N:3000005001 1914	SI-Interbus 2 MBd 82400000021230 S/N:3000005001 1914

Two variants are available, 500 kBd and 2 MBd. The specific variant can be identified from the label located on the top of the option module

2.2.1 Part numbers

The following table shows the available options for the SI-Interbus module.

Table 2-2 SI-Interbus option part numbers

Part Number	Item
82400000021220	SI-Interbus 500 kBd
82400000021230	SI-Interbus 2 MBd
9500-1067	RJ45 to D9F Cable

2.3 Date code format

The module date code is a four digit number. The first two digits indicate the year and the remaining two digits indicate the week of the year in which the option module was manufactured.

Example:

A date code of 1914 would correspond to week 14 of the year 2019.

NOTE This date code format (YYWW) is different to the module manufacture date code as displayed in the module parameter Pr **MM.056** (YYMM).

2.4 Terminology

2.4.1 Input / Output

Throughout this document, the terms IN (or Input) and OUT (or Output) when referring to the cyclic data, refer to the data in relation to the Interbus master, so IN (or Input) would refer to the data transmitted from the SI-Interbus to the Interbus master and OUT (or Output) would refer to the data transmitted from the Interbus master to the SI-Interbus module.

2.4.2 Parameter reference

The parameters within the SI-Interbus module use a 2-digit number reference for the menu number and a 3-digit number reference for the parameter number. However, some features (such as the cyclic mappings parameters) for compatibility reasons only support a 2-digit number reference for the parameter, any 2-digit parameter reference used in this document may also be used as a 3-digit number reference by adding a leading 0.

So, for example, in **Figure 6-1** ***Network loss trip detection***, the setup parameters **15.07**, **16.07** and **17.07** are used, these may be read as **15.007**, **16.007** and **17.007** respectively.

3 Supported features

- 10 x 16-bit (Input and output) cyclic data transfer
- Cyclic block mapping
- Cyclic mapping to SI-Applications Plus / Compact or MCi2x0 parameters
- Interbus error status (Pr **MM.050**)
- Basic module status information
- Data compression (Pr **MM.034**)
- Direct data mapping (Pr **MM.009**)
- Direct slot addressing to SI-Applications Plus / Compact or MCi2x0
- Non-cyclic mode 1 (CT Single Word)
- Non-cyclic mode 2 (PPO 4 Word)
- Non-cyclic mode 3 (PCP V2.0)
- Network loss trip (Pr **MM.007**)
- Load module defaults (Pr **MM.030**)
- Store option parameters (Pr **MM.031**)
- Restore option parameters (Pr **MM.033**)
- PC Tools support (Connect V2.13.1 or later)

4 Mechanical installation

WARNING

Before installing or removing a System Integration module, ensure the AC supply (and any DC supply) has been disconnected for at least 10 minutes.

4.1 General installation

Figure 4-1 Installation on Unidrive M200 to M400 and Commander C200 / C300 (frames 2 to 4)

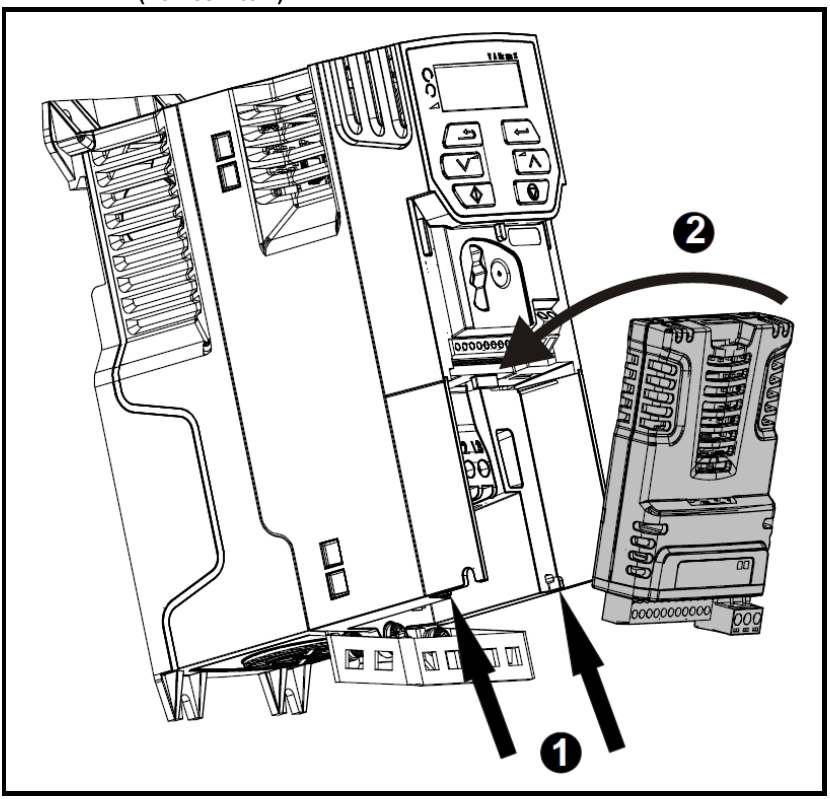

- With the option module tilted slightly backwards, align and locate the two holes in the rear of the option module onto the two tabs (1) on the drive.
- Place the option module onto the drive as shown in (2) until the module clicks into place. The terminal cover on the drive holds the option module in place, so this must be put back on.

NOTE Option modules can only be installed on drives that have the option module slot functionality.

4.2 Installation on Unidrive M200 to M400 and Commander C200 / C300 (frames 5 to 9)

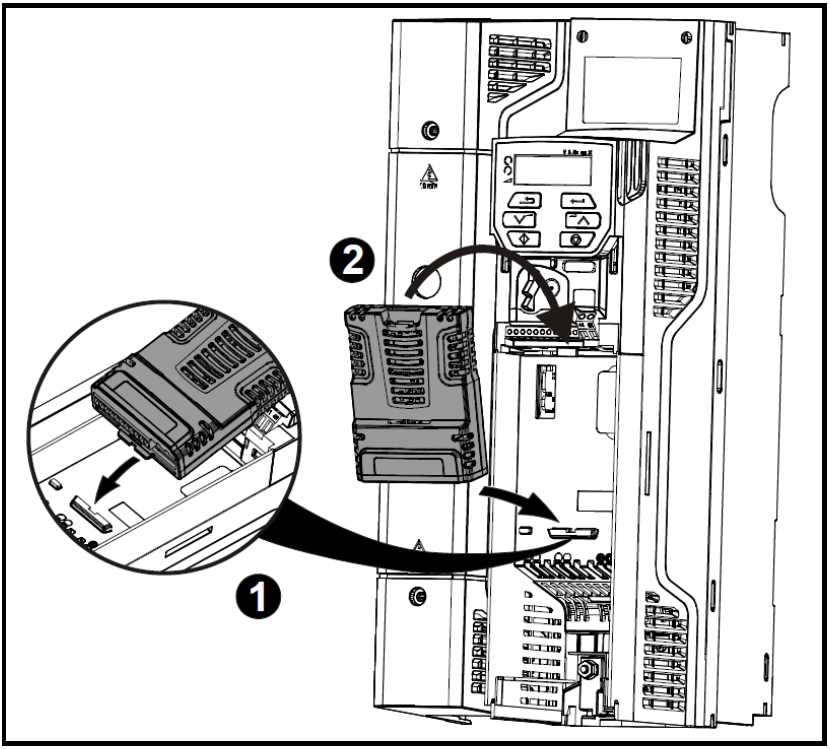

- Place the option module onto the drive as shown in (2) until the module clicks into place. The terminal cover on the drive holds the option module in place, so this must be put back on.

4.3 Installation on Unidrive M600 to M702

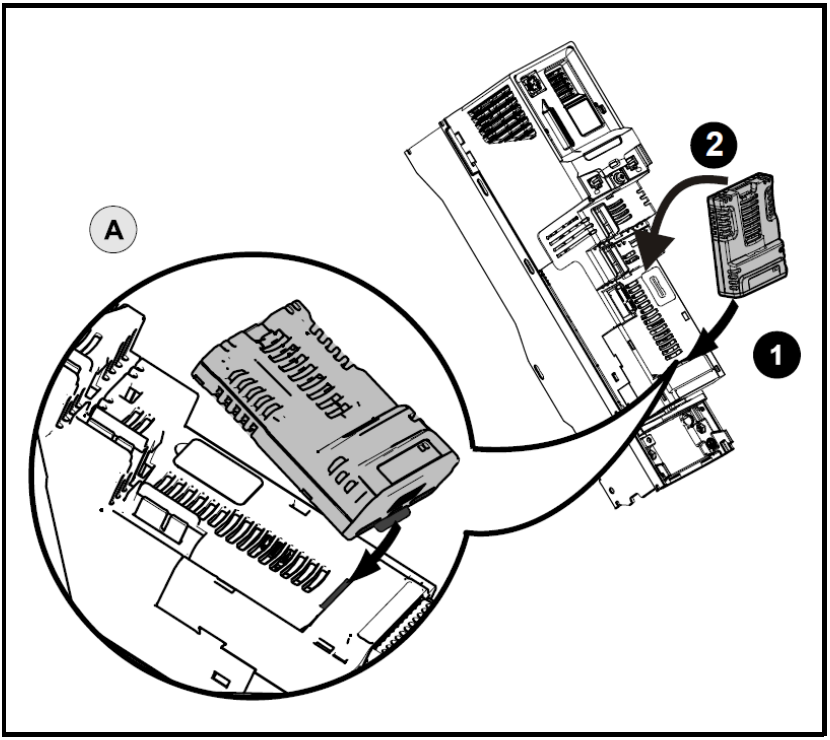

- Move the option module in direction shown (1/2).
- Align and insert the option module tab in to the slot provided, this is highlighted in the detailed view (A).
- Press down on the option module until it clicks into place.

NOTE Option module slots must be used in the following order: Slot 3 (lower), Slot 2 (middle) and then Slot 1(upper).

4.4 Installation on Digitax HD

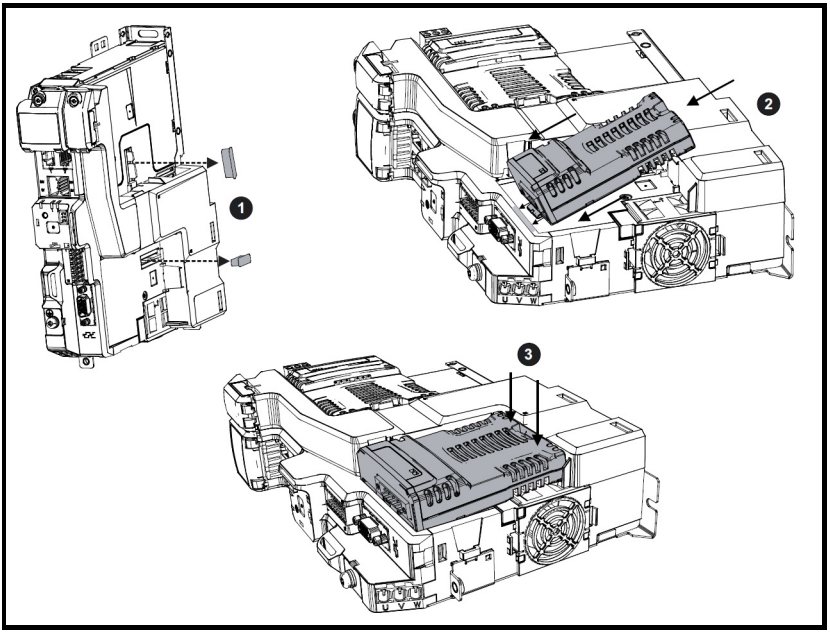

- Remove the protective interface card covers (1).
- Align and insert the option module tab into the slot provided (2).
- Once the option module tab is located into the slot on the drive, push down at the rear of the option module until it clicks into place (3).

NOTE Once fitted, the SI option module remains at an angle with respect to the drive..

NOTE When connecting SI option modules, an additional SI option mounting kit is required for the Digitax HD M75X series, if the drive is not supplied with a SI option mounting kit fitted.
The SI option mounting kit can be ordered from the supplier of the drive. Refer to the Digitax HD M75X Series Installation and Technical Guide for further information.

5 Electrical installation

The SI-Interbus has a 9-way male ‘D’ type connector for the Remote Bus IN port and an 8-way RJ45 female connector for the Remote Bus OUT port.

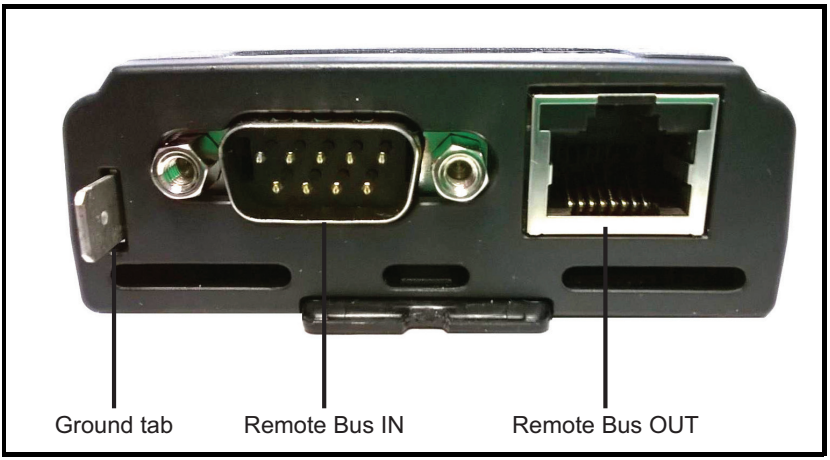

The electrical connections are shown in **Table 5-1 *SI-Interbus connections***.

Table 5-1 SI-Interbus connections

IN Terminal 9-way ‘D’ male		Colour	PLC Function	Description
1		Yellow	DO1	Positive Data line output from PLC
2		Grey	DI1	Positive Data line input to PLC
3		Brown	0V ISO IN	Isolated 0V Remote Bus OUT
6		Green	/DO1	Negative Data line output from PLC
7		Pink	/DI1	Negative Data line input to PLC
Shield			Shield	Remote Bus IN cable shield
OUT Terminal		**Colour**	**Function**	**Description**
RJ45 female	**9-way ‘D’ female**			
2	1	Yellow	DO2	Positive Data line output from PLC
1	2	Grey	DI2	Positive Data line input to PLC
3	3	Brown	0V ISO OUT	Isolated 0V Remote Bus IN
7	6	Green	/DO2	Negative Data line output from PLC
8	7	Pink	/DI2	Negative Data line input to PLC
Shield	Shield		Shield	Remote Bus OUT cable shield

NOTE The terms IN and OUT refer to the physical cable connections for the SI-Interbus module, not the PLC data direction.
IN refers to the cable from the PLC to the SI-Interbus module.
OUT refers to the cable from the SI-Interbus module to the next slave device.

NOTE The terms ‘Input’ and ‘Output’ in the table above refer to the data direction with regards to the PLC.
‘Input’ refers to the data from a slave device (e.g. SI-Interbus) to the PLC.
‘Output’ refers to the data from the PLC to a slave device (e.g. SI-Interbus).

Figure 5-1 Remote bus IN

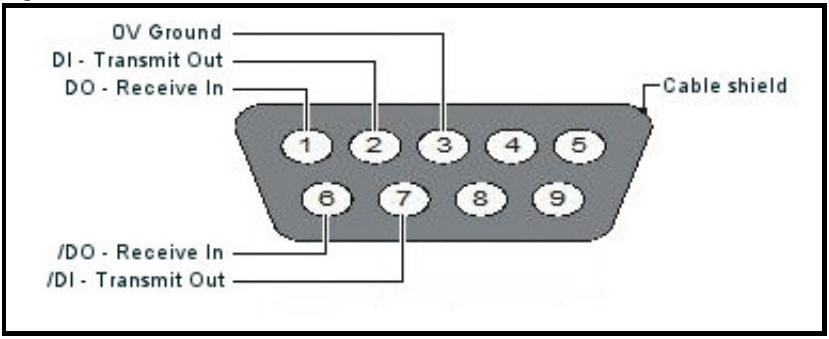

Figure 5-2 Remote bus OUT

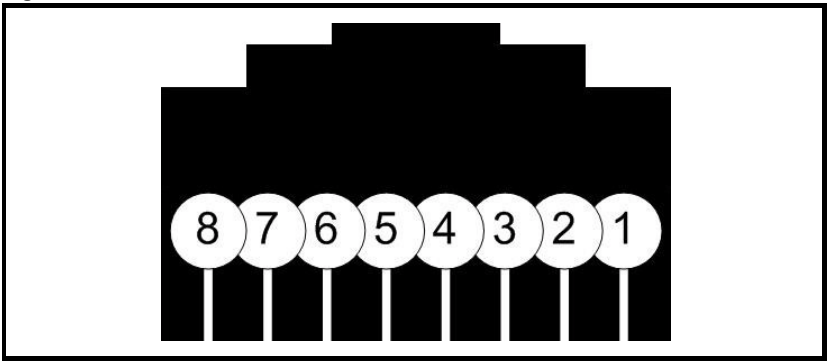

A suitable cable is provided to connect a standard Interbus 9 pin ‘D’ male connector to the RJ45 port and can be purchased separately from Control Techniques using the part number 9500-1067.

Figure 5-3 Remote bus OUT adapter

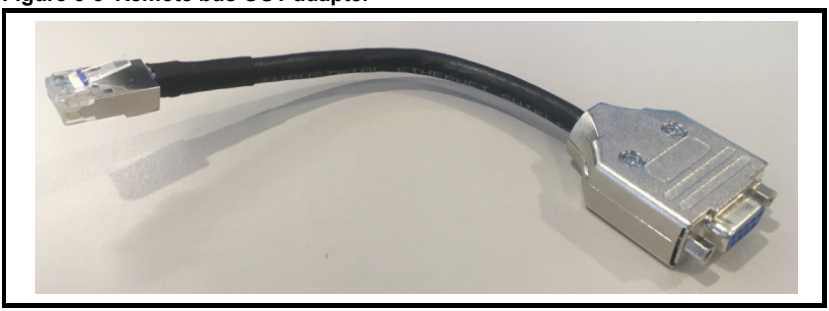

Figure 5-4 Remote bus OUT wiring details

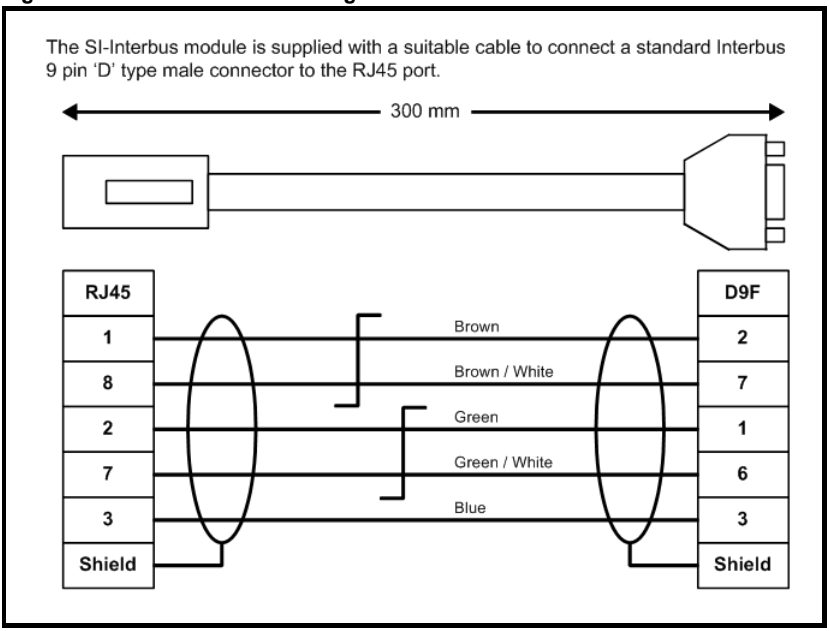

5.1 Interbus cable

Interbus cable has three twisted pairs plus overall shielding. The colours normally used on Interbus networks are shown in **Table 5-1** ***SI-Interbus connections***. It is recommended to follow these wiring guidelines as this will make it easier to trace possible wiring errors during commissioning.

5.2 SI-Interbus cable shield connections

The Remote Bus IN and Remote Bus OUT cable shields MUST be connected to the shell of the connector. There is no requirement to connect the cable shields directly to Ground at any other point in the Interbus network.

5.3 Interbus network termination

Termination resistors are not required on Interbus networks, as each section of cable is automatically terminated on every Interbus device. The Ground Tab of the SI-Interbus must be connected to a suitable grounding point as close to the drive as possible using the minimal cable length.

5.4 Maximum network length

The maximum cable length is 400 metres between Remote Bus devices. Hence, the maximum total length of the Interbus network depends entirely on the number of devices connected to the network.

6 Getting started

6.1 Node address

Interbus devices do not require a specific node address to be configured, the physical wiring of the network determines the Communication Reference (CR) that will be assigned to the device by the Interbus master controller.

6.2 Communication data rate

Interbus networks operate at a fixed baud rate, either 500 kBd or 2 MBd.
The SI-Interbus module is configured during manufacture to operate at one of these rates, this configuration is determined by the part number specified at the time of ordering and cannot be changed by the user.

6.3 Parameter reference

Parameters are referenced using the notation Pr **MM.xx**, where 'Pr' means parameter, '**MM**' represents menu 15, 16 or 17 (depending upon which slot contains the option module) and 'xx' is the parameter number within the menu.

Table 6-1 Slot / menu numbering

Slot	Menu
1	15
2	16
3	17

The following conventions are used in this document:

- Pr **MM.ppp** – Where **MM** signifies the slot specific menu allocated to the option module setup menu and **ppp** signifies the parameter number within that setup menu.
- Pr **mm.000** – Signifies parameter number 0 in any drive or option menu.

The SI-Interbus module displays the module ID code in Pr **MM.001**, this module ID code is used to identify the module variant.

SI-Interbus Module ID		
Pr **MM.001**	Default	404 (500 kBd) or 414 (2 MBd)
	Type	16-bit
	Access	RO

6.4 Configuring the cyclic data

6.4.1 What is cyclic data

Cyclic data is a method of data transfer that must be setup during network configuration, but is transmitted automatically once configuration is complete. The high speed data transfer is achieved by transmitting only data bytes over the Interbus network, and relying on local mapping information within the SI-Interbus and Interbus master controller to ensure that the correct data is sent to the correct locations. This method relies on the master controller program writing and reading data values to and from the registers allocated to the node during network configuration, and the source and destination of IN and OUT data being setup correctly in the drive.

The flexibility of the SI-Interbus means that each cyclic data OUT channel can be directed to any read-write drive (or option module) parameter. Similarly, each cyclic data IN channel can use any drive (or option module) parameter as a source of data.

NOTE The cyclic data mapping cannot be changed dynamically, as changes to the mapping parameters will only take effect during initialisation of the SI-Interbus, i.e. after a reset, or at power up.

6.4.2 Data format

The default data format is 4 words IN and 4 words OUT, this value can be changed to suit the application (up to 10 IN and 10 OUT words). Each cyclic data channel is mapped directly to a drive (or option module) parameter.

Interbus Data Format		
Pr **MM.005**	Default	4 (Words)
	Type	16-bit
	Access	RW

The SI-Interbus data format is specified as “NNPP”, where “NN” is the non-cyclic data mode, and “PP” is the number of cyclic data words as shown in the following table.

Table 6-2 Interbus data formats

Pr MM.005	NN	PP	Non-cyclic Mode	Cyclic Words
1 to 10	0	1 to 10	None	1 to 10
100 to 109	1	0 to 9	CT Single Word	0 to 9
200 to 209	2	0 to 6	PPO 4 Word	0 to 6
300 to 309	3	0 to 9	PCP	0 to 9

The default mappings are shown in **Table 6-3 *Default mappings***.

Table 6-3 Default mappings

Cyclic Channel	Data Word	Default Mapping
IN channel 0	Word 0, 1	Pr **10.040** (*Status Word*)
IN channel 1	Word 2, 3	Pr **2.001** (*Post Ramp Reference*)
OUT channel 0	Word 0, 1	Pr **6.042** (*Control Word*)
OUT channel 1	Word 2, 3	Pr **1.021** (*Preset Reference 1*)

The SI-Interbus can map a total of up to 10 words as input and 10 words as output, by default with Pr **MM.034** (*Data Compression Enable*) = Off, each cyclic channel will map 2 words to the mapped parameter, irrespective of whether the parameter is a 16-bit or 32-bit parameter, this gives a total number of 5 available mappings. If any desired mapping parameter is less than 32 bits in size, then Pr **MM.034** (*Data Compression Enable*) may be set to On, this will then use only 1 word for each cyclic mapping channel as long as the mapped parameter size is less than 32 bits. This increases the number of available mappings by 1 for each mapped parameter that is not a 32-bit parameter, up to a maximum of 10 parameters.

If the mapped parameter size is actually 32 bits, then 2 words will still be used to transfer the data.

NOTE The size of the data mapping will depend on the size of the target / source parameter. If using 16-bit (or less) parameters the data can be sent as 16 bits on the network (Pr **MM.034** = On).
Parameters larger than 16 bits always use 32 bits on the network irrespective of the setting of Pr **MM.034**).

6.4.3 Cyclic input mappings

Parameters Pr **MM.010** to Pr **MM.019** specify the source parameters for the cyclic data input mappings.

Cyclic Input Mappings 1 to 10		
Pr **MM.010** to Pr **MM.019**	Default	Mapping 1: 1040 Mapping 2: 201 Mapping 3 to 10: 0
	Type	16-bit
	Access	RW

The reference for the source parameter is entered in the mapping parameter in the form MMPP, where MM represents the menu number of the source parameter and PP represents the parameter number of the source parameter.

6.4.4 Cyclic output mappings

Parameters Pr **MM.020** to Pr **MM.029** specify the destination parameters for the cyclic data output mappings.

Cyclic Output Mappings 1 to 10		
Pr **MM.020** to Pr **MM.029**	Default	Mapping 1: 642 Mapping 2: 121 Mapping 3 to 10: 0
	Type	16-bit
	Access	RW

The reference for the destination parameter is entered in the mapping parameter in the form MMPP, where MM represents the menu number of the destination parameter and PP represents the parameter number of the destination parameter.

NOTE The cyclic data channels do not use decimal points. To write a value of 24.6 Hz to Pr **1.021**, the value must be transmitted as 246.

6.4.5 Data compression

Cyclic Data Compression Enable		
Pr **MM.034**	Default	0 (Off)
	Type	1-bit
	Access	RW

By default, the SI-Interbus uses 32 bits for each data channel, even if the mapped parameter is a 16-bit parameter. When cyclic data compression is enabled (Pr **MM.034** = On), a data channel will only use 32 bits if the mapped parameter is a 32-bit parameter. If the mapped parameter is only 1, 8 or 16 bits wide 16 bits will be used for that particular data channel.

6.4.6 Direct data mapping

By default, the cyclic data mapping parameters **MM.010** to **MM.029** are used as pointers to specify the destination parameters for OUT data received from the Interbus master controller, and the source parameter of IN data to be transmitted to the Interbus master controller.

When direct data mapping is enabled (Pr **MM.009** = On), the cyclic data mapping parameters are used as the actual source or destination parameters for the cyclic data.

Hence, IN data values read from Pr **MM.010** to **MM.019** are transmitted to the Interbus master controller and OUT data values arriving from the Interbus master controller are written directly into Pr **MM.020** to Pr **MM.029**.

Direct Data Mapping Enable		
Pr **MM.009**	Default	0 (Off)
	Type	1-bit
	Access	RW

6.4.7 Interbus operating status

The Interbus network activity can be monitored in the operating status parameter, Pr **MM.006**.

When the SI-Interbus is communicating successfully with the Interbus master controller, the operating status will give an indication of the number of cyclic data messages per second that are being processed.

Interbus Operating Status		
Pr **MM.006**	Default	None
	Type	16-bit
	Access	RO

If Pr **MM.006** is a negative value, this indicates a non-operational state as shown in the following table.

Table 6-4 Interbus operating status

Pr MM006	Description
> 0	Network healthy, displays the number of messages processed per second
0	Network health, no cyclic data transfer
-1	SI-Interbus has initialised correctly and waiting for the Interbus master to initialise communication
-2	The SI-Interbus module reports an internal hardware fault
-3	Configuration error, invalid setting in the SI-Interbus configuration parameters

If Pr **MM.006** shows a positive value, this value is dependent upon the Interbus network communication speed, number of mappings and whether non-cyclic communications are active or not.

6.4.8 Network loss trip timeout

The SI-Interbus resets an internal timer when a valid cyclic data message is received from the Interbus network. The network loss trip is triggered when no new messages are received before the timer times out. The SI-Interbus error code parameter (Pr **MM.050**) will show a value of 65 when a network loss trip has occurred.

Network Loss Trip Timeout		
Pr **MM.007**	Default	200 (ms)
	Type	16-bit
	Access	RW

The network loss trip is not enabled internally until cyclic data has been detected. This prevents spurious network loss trips while the Interbus master controller is initialising the network.

Figure 6-1 Network loss trip detection

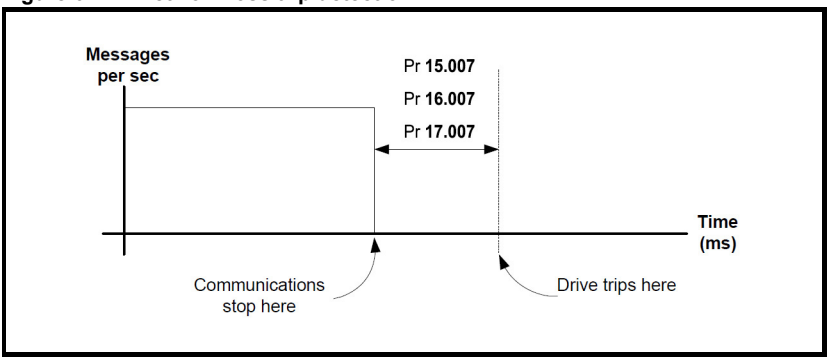

As the trip delay time is reduced, the network loss trip will occur more quickly in the event of a loss of network. However, if the network loss trip time is reduced too far, spurious network loss trips may occur due to the timeout occurring before the next message has arrived.

The minimum network loss trip time for a particular network depends entirely on the number of messages per second being received under normal operation. As a rough guide, the network loss trip time should be set such that a minimum of 4 messages will be received in the specified time period under normal operating conditions.

The network loss trip can be disabled by setting Pr **MM.007** to 0. In this case, the drive will continue to operate using the last received values. It is the user's responsibility to ensure that adequate safety precautions are taken to prevent damage or injury by disabling the drive in the event of a loss of communications.

6.4.9 Cyclic data mapping status

If the SI-Interbus operating status parameter (Pr **MM.006**) indicates a value of -3, a mapping configuration error has been detected. The actual reason for the error is indicated by the mapping status parameter, Pr **MM.049**. When a mapping error has been corrected, reset the SI-Interbus by setting Pr **MM.032** to On.

Cyclic Data Mapping Status		
Pr **MM.049**	Default	None
	Type	8-bit
	Access	RO

Possible values for the mapping status are shown in **Table 12-2 *Mapping status codes***.

NOTE If the mapping configuration size has changed (Pr **MM.005** *Interbus Data Format*), then the module reset is insufficient to fully initialise the Interbus network and after saving parameters, the module must be power-cycled.

6.4.10 Block mapping

Block mapping provides a quick and convenient way of mapping sequential parameters to the Interbus network with the minimum number of mapping parameters specified.

Block mapping is used automatically if:

- The value entered in the mapping parameters (Pr **MM.010** to **MM.029**) are specified in ascending order (i.e. lowest value parameter number first).
- The menu number of adjacent mappings are identical.

NOTE Care must be taken to ensure the total number of cyclic mappings specified does not exceed the maximum number allowed (Pr **MM.005**).

For example, the following mappings would map 5 x 32-bit parameters in menu 20, starting from Pr **20.021** to Pr **20.025** inclusive as inputs and 5 x 16-bit parameters in menu 18, starting from Pr **18.011** to Pr **18.015** inclusive and 5 x 16-bit parameters in menu 19, starting at Pr **19.021** to Pr **19.025** inclusive as outputs.

Table 6-5 Block mapping example

Mapping Parameter	Mapping Value
Pr **MM.010**	2021
Pr **MM.011**	2025
Pr **MM.012** to Pr **MM.019**	0
Pr **MM.020**	1811
Pr **MM.021**	1815
Pr **MM.022**	1921
Pr **MM.023**	1925
Pr **MM.024** to Pr **MM.029**	0

For this example to work, data compression must be enabled (Pr **MM.034** = On).

The following table shows the data structure for the example mappings.

Table 6-6 Data structure example

Target Parameter	Data Word
Pr **20.021**	IN Word 0, 1
Pr **20.022**	IN Word 2, 3
Pr **20.023**	IN Word 4, 5
Pr **20.024**	IN Word 6, 7
Pr **20.025**	IN Word 8, 9
Pr **18.011**	OUT Word 0
Pr **18.012**	OUT Word 1
Pr **18.013**	OUT Word 2
Pr **18.014**	OUT Word 3
Pr **18.015**	OUT Word 4
Pr **19.021**	OUT Word 5
Pr **19.022**	OUT Word 6
Pr **19.023**	OUT Word 7
Pr **19.024**	OUT Word 8
Pr **19.025**	OUT Word 9

To avoid block mapping when parameters of a particular menu are specified, the parameter values should be entered in descending order, i.e. largest value parameter first.

6.4.11 Disabling cyclic data channels

If any cyclic data channels are not being used, the associated mapping parameters should be set to 0. The Interbus master controller will transmit a value of 0 for the unused cyclic data words, and any unused incoming data values will be set to 0 before being passed to the Interbus master controller.

6.4.12 Cyclic data mapping examples

The following sections show some example data formats that can be selected, and the parameter mapping that will apply (by default) to each format.

6.4.12.1 Two cyclic channels only (default)

This data format provides two cyclic data channels with no non-cyclic data. The total data length is 4 words in and 4 words out. This data format is selected by default.

Configuration parameters:

Pr **MM.005** (*Interbus Data Format*) = 4.

Pr **MM.034** (*Cyclic Data Compression Enable*) = Off.

Table 6-7 Default cyclic data mapping

Cyclic Channel	Data Word	Parameter	Default Mapping
IN Channel 0	Word 0, 1	Pr **MM.010**	Pr **10.40**, *Status Word*
IN Channel 1	Word 2, 3	Pr **MM.011**	Pr **2.01**, *Post Ramp Reference*
OUT Channel 0	Word 0, 1	Pr **MM.020**	Pr **6.42**, *Control Word*
OUT Channel 1	Word 2, 3	Pr **MM.021**	Pr **1.21**, *Preset Reference 1*

6.4.12.2 Three cyclic channels with CT Single Word non-cyclic data

This data format provides three cyclic data channels, plus an additional channel for CT Single Word (Mode 1) non-cyclic data (see section 8 *Non-Cyclic data*). The total data length is 8 words.

Configuration parameters:

Pr **MM.005** (*Interbus Data Format*) = 106.

Pr **MM.034** (*Cyclic Data Compression Enable*) = Off.

Table 6-8 Mapping for 3 cyclic channels with CT Single Word non-cyclic

Cyclic Channel	Data Word	Parameter	Default Mapping
IN Channel 0	Word 0, 1	Pr **MM.010**	Pr **61.50**, *CT Single Word non-cyclic mode 1*
IN Channel 1	Word 2, 3	Pr **MM.011**	Pr **10.40**, *Status Word*
IN Channel 2	Word 4, 5	Pr **MM.012**	Pr **2.01**, *Post Ramp Reference*
IN Channel 3	Word 6 to 7	Pr **MM.013**	*User defined*
OUT Channel 0	Word 0, 1	Pr **MM.020**	Pr **61.50**, *CT Single Word non-cyclic mode 1*
OUT Channel 1	Word 2, 3	Pr **MM.021**	Pr **10.40**, *Status Word*
OUT Channel 2	Word 4, 5	Pr **MM.022**	Pr **2.01**, *Post Ramp Reference*
OUT Channel 3	Word 6 to 7	Pr **MM.023**	*User defined*

6.4.12.3 Five cyclic channels only

This data format provides five cyclic data channels, with no non-cyclic data channel. The total data length is 10 words.

Configuration parameters:

Pr **MM.005** (*Interbus Data Format*) = 10.

Pr **MM.034** (*Cyclic Data Compression Enable*) = Off.

Block mapping can be used to map the remaining un-used data words.
(See section 6.4.10 *Block mapping*).

Table 6-9 Mapping for 5 cyclic channels only

Cyclic Channel	Data Word	Parameter	Default Mapping
IN Channel 0	Word 0, 1	Pr **MM.010**	Pr **10.40**, *Status Word*
IN Channel 1	Word 2, 3	Pr **MM.011**	Pr **2.01**, *Post Ramp Reference*
IN Channel 2 to 4	Word 4 to 9	Pr **MM.012** to Pr **MM.014**	*User defined*
OUT Channel 0	Word 0, 1	Pr **MM.020**	Pr **6.42**, *Control Word*
OUT Channel 1	Word 2, 3	Pr **MM.021**	Pr **1.21**, *Preset Reference 1*
OUT Channel 2 to 4	Word 4 to 9	Pr **MM.022** to Pr **MM.024**	*User defined*

6.4.12.4 Three cyclic channels with PPO 4 Word non-cyclic data

This data format provides three cyclic data channels, plus an additional 4 words for PPO 4 Word (Mode 2) non-cyclic data (see section 8 *Non-Cyclic data*). The total data length is 10 words.

Configuration parameters:

Pr **MM.005** (*Interbus Data Format*) = 206.

Pr **MM.034** (*Cyclic Data Compression Enable*) = Off.

Table 6-10 Mapping for 3 cyclic channels with PPO 4 Word non-cyclic

Cyclic Channel	Data Word	Parameter	Default Mapping
IN Channel 0	Word 0 to 3	Pr **MM.010**	Pr **61.51**, *PPO 4 Word Non-cyclic mode 2*
IN Channel 1	Word 4, 5	Pr **MM.011**	Pr **10.40**, *Status Word*
IN Channel 2	Word 6, 7	Pr **MM.012**	Pr **2.01**, *Post Ramp Reference*
IN Channel 3	Word 8, 9	Pr **MM.013**	*User defined*
OUT Channel 0	Word 0 to 3	Pr **MM.020**	Pr **61.51**, *PPO 4 Word Non-cyclic mode 2*
OUT Channel 1	Word 4, 5	Pr **MM.021**	Pr **10.40**, *Status Word*
OUT Channel 2	Word 6, 7	Pr **MM.022**	Pr **2.01**, *Post Ramp Reference*
OUT Channel 3	Word 8, 9	Pr **MM.023**	*User defined*

6.4.12.5 Three cyclic channels with PCP non-cyclic data

This data format provides three cyclic data channels with PCP (Mode 3) non-cyclic data (see section 8.3 *Mode 3 - Peripheral Communications Protocol V2.0*). The total data length is 7 words.

Configuration parameters:

Pr **MM.005** (*Interbus Data Format*) = 306.

Pr **MM.034** (*Cyclic Data Compression Enable*) = Off.

Table 6-11 Mapping for 3 cyclic channels with PCP non-cyclic

Cyclic Channel	Data Word	Parameter	Default Mapping
IN Channel 0	Word 0, 1	Pr **MM.010**	Pr **10.40**, *Status Word*
IN Channel 1	Word 2, 3	Pr **MM.011**	Pr **2.01**, *Post Ramp Reference*
IN Channel 2	Word 4, 5	Pr **MM.012**	*User defined*
OUT Channel 0	Word 0, 1	Pr **MM.020**	Pr **6.42**, *Control Word*
OUT Channel 1	Word 2, 3	Pr **MM.021**	Pr **1.21**, *Preset Reference 1*
OUT Channel 2	Word 4, 5	Pr **MM.022**	*User defined*

There is no mapping required when the peripheral communications protocol (PCP) is enabled.

The PCP channel will use 1 cyclic data word, but it cannot be accessed directly in the Interbus master controller or the SI-Interbus.

7 Additional features

7.1 Load module default parameters

Load Module Defaults		
Pr **MM.030**	Default	Off
	Type	1-bit
	Access	RW

If set to “On” when the module is reset (**MM.032** = On), this parameter will cause the option module to return to its “Out of Box” configuration any settings stored on the module will be returned to their default values.

NOTE This action does not save the parameters in the drive, a drive save must be performed if the parameters are to be saved after loss of power (see **section 7.6** ***Saving drive parameters***).

7.2 Store option parameters

Store Option Parameters		
Pr **MM.031**	Default	Off
	Type	1-bit
	Access	RW

The SI-Interbus module can save a copy of the setup parameters in its flash memory, this allows the user, for example, to keep a copy of a working set of parameters in the module in case the host drive is replaced, or if the user modifies the setup parameters which may result in the Interbus master being unable to communicate with the SI-Interbus module.

To store the SI-Interbus configuration parameters in the flash memory:

- Set Pr **MM.031** to On
- Set Pr **MM.000** to 1001
- Press the drive red reset button or set Pr **10.038** to 100

The Interbus communication will stop and the SI-Interbus configuration parameters will be saved within the SI-Interbus flash memory. The SI-Interbus will then reset and re-initialise using the configuration parameter values.

7.3 Module reset

SI-Interbus Module ID		
Pr **MM.032**	Default	Off
	Type	1-bit
	Access	RW

Any changes made to the SI-Interbus configuration parameters will not take effect until the SI-Interbus has been reset.

To reset the SI-Interbus option module set Pr **MM.032** to On.

When the reset sequence has been completed, Pr **MM.032** will be reset to Off and the SI-Interbus will re-initialise using the updated configuration.

NOTE This does not store the drive or option module parameters in the drive or option module, please refer to **section 7.6** ***Saving drive parameters***.

7.4 Restore saved option parameters

Restore Saved Option Parameters		
Pr **MM.033**	Default	Off
	Type	1-bit
	Access	RW

If valid configuration parameters have previously been stored in the SI-Interbus flash memory (Pr **MM.031**), these values can be restored into the host drive parameters by setting Pr **MM.033** to On.

When the configuration parameter values have been uploaded to the host drive SI-Interbus will reset and re-configure using the updated parameter values.

This feature allows a pre-configured SI-Interbus module to be installed into a host drive without losing the SI-Interbus configuration.

7.5 Reset all option modules

To reset all option modules fitted in the drive:

- Set Pr **MM.000** to 1070
- Press the red reset button on the drive or set Pr **10.038** to 100

NOTE This does not store the drive or option module parameters in the drive or option module, please refer to **section 7.6** ***Saving drive parameters***.

7.6 Saving drive parameters

After changing a drive (or option module) parameter, the change needs to be saved in order to be maintained in the event of a loss of power or power-cycle.

NOTE This does not apply to drive menu 20 parameters unless the SI-Applications option module is used to save the menu 20 parameters (see the SI-Applications documentation for more information).

To save the drive parameters:

- Set Pr **MM.000** to 1001
- Press the red reset button on the drive or set Pr **10.038** to 100

The drive (and option module) parameters are now saved.

8 Non-Cyclic data

The non-cyclic data channel provides a method for the Interbus master controller to read from or write to any parameter within the drive or option module. This channel can be used for single infrequent data transfers, or uploading and downloading parameter sets to or from a particular node.

The SI-Interbus provides three non-cyclic data formats, plus the option to disable non-cyclic data.

- CT Single Word format (mode 1, see **section 8.1** ***Mode 1 - CT Single Word mode***)
- PPO 4 Word format (mode 2, see **section 8.2** ***Mode 2 - PPO 4 Word mode***)
- Peripheral Communications Protocol V2.0 (mode 3, see **section 8.3** ***Mode 3 - Peripheral Communications Protocol V2.0***)

The non-cyclic mode is indicated by the first digit in the value of Pr **MM.005** (*Interbus Data format*) as shown in the following table.

Table 8-1 Non-cyclic modes

Non-cyclic Mode	Data Format (Pr MM.005)	Description
Disabled	0xx	Non-cyclic data disabled
CT Single Word	1xx	CT Single Word non-cyclic (mode1). Uses 2 cyclic data words if data compression is disabled or 1 cyclic data word if data compression is enabled (Pr **MM.034**). Pr **MM.010** and Pr **MM.020** will be set to the value 6150 and any existing mappings will be moved down one place.
PPO 4 Word	2xx	PPO 4 Word non-cyclic data (mode 2). Uses four cyclic data words. Pr **MM.010** and Pr **MM.020** will be set to the value 6151 and any existing mappings will be moved down one place.
PCP V2.0	3xx	Peripheral Communications Protocol (PCP) V2.0. Existing mapping configuration will not be affected.

8.1 Mode 1 - CT Single Word mode

The CT Single Word (mode 1) uses one cyclic channel for non-cyclic data. The non-cyclic sub-protocol requires a specific sequence of 4 (16-bit parameters) or 6 (32-bit parameters) telegrams to implement the parameter access. Each non-cyclic word or telegram is split into 2 bytes to implement the sub-protocol, with the high byte containing the control codes for each telegram, and the low byte containing the data for each telegram.

NOTE If cyclic data compression is disabled (Pr **MM.034** = Off), the CT Single Word non-cyclic channel will be 32 bits wide, i.e. uses 2 words, and data must be transferred on the low word. If cyclic data compression is enabled (Pr **MM.034** = On), the CT Single Word non-cyclic channel will revert to 16 bits and only use 1 word.

8.1.1 Mapping for CT Single Word non-cyclic data

To configure an SI-Interbus in slot 3 for CT Single Word mode non-cyclic data, the following steps must be performed:

- Set Pr **17.005** to the required mode
- Set Pr **17.032** to On to reset and reconfigure the SI-Interbus

When the SI-Interbus re-initialises, it will map cyclic data IN word 0 and OUT word 0 to the CT Single Word protocol parameter, Pr **61.50**. All existing mapping parameters will be moved down by 1 place, i.e. the previous mapping set in Pr **17.010** and Pr **17.020** will now appear in Pr **17.011** and Pr **17.021** respectively.

Table 8-2 ***Six cyclic words with CT Single Word non-cyclic data mapping*** shows what happens to the mappings when the data format is changed from 6 cyclic words to 6 cyclic words with CT Single Word non-cyclic data.

Table 8-2 Six cyclic words with CT Single Word non-cyclic data mapping

Mapping Parameter	Before format change (Pr 17.005 = 6)		After format change (Pr 17.005 = 6)	
	Value	Mapping	Value	Mapping
Pr **17.010**	1040	Pr **10.40**, *Status Word*	6150	Pr **61.50**, *CT Single Word non-cyclic mode 1*
Pr **17.011**	201	Pr **2.01**, *Post Ramp Reference*	1040	Pr **10.40**, *Status Word*
Pr **17.012**	0	*User Defined*	201	Pr **2.01**, *Post Ramp Reference*
Pr **17.013** to Pr **17.019**	0	*Not available*	0	*Not available*
Pr **17.020**	642	Pr **6.42**, *Control Word*	6150	Pr **61.50**, *CT Single Word non-cyclic mode 1*
Pr **17.021**	121	Pr **1.21**, *Preset Reference 1*	642	Pr **6.42**, *Control Word*
Pr **17.022**	0	*User Defined*	121	Pr **1.21**, *Preset Reference 1*
Pr **17.023** to Pr **17.029**	0	*Not available*	0	*Not available*

The problem with this setup is that the user defined mappings (Pr **17.012** and Pr **17.022**) are lost when the SI-Interbus is re-initialised. This is because there is insufficient mappings available to move the user defined channel into.

To maintain all mappings when adding the CT Single Word non-cyclic data channel, the cyclic data format (Pr **17.005**) needs to be set to 108, this adds an additional cyclic channel to accommodate the user defined channel as shown in **Table 8-3** ***Eight cyclic words with CT Single Word non-cyclic data mapping***.

Table 8-3 Eight cyclic words with CT Single Word non-cyclic data mapping

Mapping Parameter	Before format change (Pr 17.005 = 6)		After format change (Pr 17.005 = 108)	
	Value	Mapping	Value	Mapping
Pr **17.010**	1040	Pr **10.40**, *Status Word*	6150	Pr **61.50**, *CT Single Word non-cyclic mode 1*
Pr **17.011**	201	Pr **2.01**, *Post Ramp Reference*	1040	Pr **10.40**, *Status Word*
Pr **17.012**	0	*User Defined*	201	Pr **2.01**, *Post Ramp Reference*
Pr **17.013**	0	*Not available*	0	*User Defined*
Pr **17.014** to Pr **17.019**	0	*Not available*	0	*Not available*
Pr **17.020**	642	Pr **6.42**, *Control Word*	6150	Pr **61.50**, *CT Single Word non-cyclic mode 1*
Pr **17.021**	121	Pr **1.21**, *Preset Reference 1*	642	Pr **6.42**, *Control Word*
Pr **17.022**	0	*User Defined*	121	Pr **1.21**, *Preset Reference 1*
Pr **17.023**	0	*Not available*	0	*User Defined*
Pr **17.024** to Pr **17.029**	0	*Not available*	0	*Not available*

8.1.2 CT Single Word protocol

The CT Single Word protocol uses the lower 16 bits of the non-cyclic channel if data compression is disabled, and all 16 bits if data compression is enabled.

All parameter values are written as signed 32-bit data values. Decimal point information is inserted automatically when the data value is written to the drive, and removed when the data value is read.

Hence, the number of decimal places of the target parameter must be known.

Writing a value of 1234 to a parameter with 2 decimal places will produce a value of 12.34 in the target parameter. Similarly, reading a value of 12.34 will return a 32-bit integer value of 1234.

The CT Single Word format is shown in **Table 8-4 *CT Single Word bit significance***.

Table 8-4 CT Single Word bit significance

b15	b14	b13	b12	b11	b10	b9	b8
READ	ERR	*Reserved*	32-BIT	Stamp Number			

b7	b6	b5	b4	b3	b2	b1	b0
Data Byte							

The following table (**Table 8-5 *CT Single Word format***) shows the CT Single Word format in more detail.

Table 8-5 CT Single Word format

Bit	Function	Value	Description
0 to 7	Data	0 to 255	Depending on the stamp number of the telegram, this byte contains the menu, parameter or data byte.
8 to 11	Stamp Number	0 to 6	Indicates the stamp number of the telegram. This shows which part of the message is currently in progress. Setting the stamp number to 0 resets the internal non-cyclic state machine.
12	32-BIT	0 = 16-bit 1 = 32-bit	Specifies whether a 16-bit or 32-bit data value is to be accessed. If 32-BIT is set to 1, telegrams 5 and 6 will be used to transfer the additional data bytes. If 32-BIT is set to 0, then the data bytes will be transferred in telegrams 3 and 4.
13	*Reserved*	0	Reserved for future use. Always set to 0.
14	ERR	0 = Data OK 1 = Error	Indicates the success or failure of the message. Failure could occur if the parameter does not exist, or is read-only or write-only parameter. This bit will also be set if the parameter value is out of range in 16-bit mode.
15	READ	0 = Write 1 = Read	Defines whether the data word is part of a READ or WRITE cycle.

8.1.3 16-bit parameter access

16-bit data can be accessed using only 4 telegrams. Telegram 4 becomes the low data byte request (or value, for a write sequence) and telegrams 5 and 6 are not required. If an attempt is made to access a 32-bit parameter, the parameter value will be returned, provided that the parameter value does not exceed the signed 16-bit limits (-32768 to 32767). If the value is not within the signed 16-bit value, the ERR bit will be set.

When writing data to a 32-bit parameter using 16-bit mode, the 16-bit data will be treated as a signed 16-bit data value. This limits the range that can be written to a 32-bit parameter.

8.1.4 Reading parameters using CT Single Word

To read 32-bit parameters using CT Single Word non-cyclic channel, the following “telegrams” must be transmitted to construct the final message.

- Telegram 1 Define menu number.
- Telegram 2 Define parameter number.
- Telegram 3 Request high data byte.
- Telegram 4 Request mid-high data byte (32-bit) or low data byte (16-bit).
- Telegram 5 Request mid-low data byte (32-bit).
- Telegram 6 Request low data byte (32-bit).

Figure 8-1 ***CT Single Word read sequence*** shows the normal sequence for reading a parameter using CT Single Word non-cyclic.

NOTE If a telegram produces an error at any point in the sequence the reply to the master will have the error bit ERR set to a 1 and the data bits will have no significance. Setting the stamp number to 0 will reset the internal non-cyclic state machine.

Figure 8-1 CT Single Word read sequence

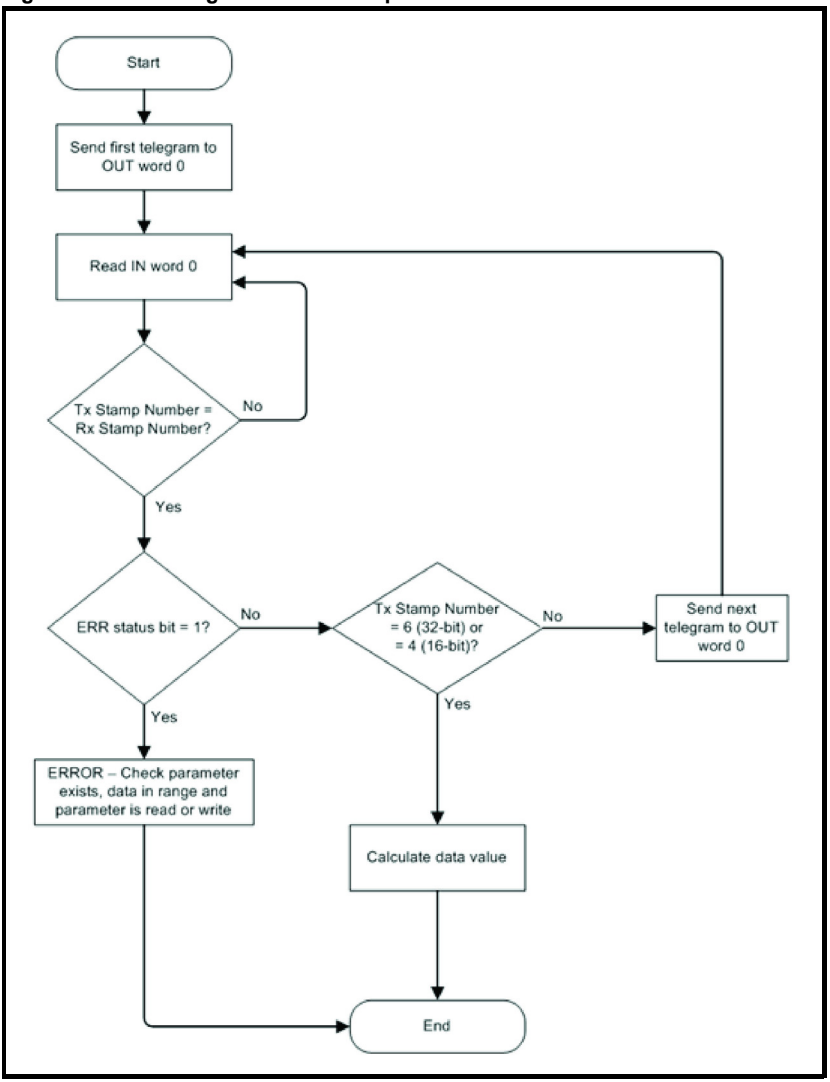

The following example telegrams show how to read the post-ramp reference (rpm) with 1 decimal place from Pr **2.001** in the drive.

Telegram 1

The first telegram from the Interbus master controller indicates a READ cycle by setting bit b15 to 1 and with stamp number 1.

The data byte contains the menu number of the parameter that is to be read.

Request

Bit	b15 to b12	b11 to b8	b7 to b4	b3 to b0
Value	1001	0001	0000	0010

Data word = 0x9102
Stamp Number = 1
Menu = 2

When the first telegram has been received and processed in the slave node, it is mirrored in the non-cyclic IN word back to the Interbus master controller. This is the signal to the master controller program that the first telegram of the message has been received and understood, the second telegram can now be transmitted.

Response

Bit	b15 to b12	b11 to b8	b7 to b4	b3 to b0
Value	1001	0001	0000	0010

Data word = 0x9102
Stamp Number = 1
Menu = 2

Telegram 2

The second telegram from the Interbus master controller also indicates a READ cycle but the stamp number is now 2.

The data byte contains the parameter number of the parameter that is to be read.

Request

Bit	b15 to b12	b11 to b8	b7 to b4	b3 to b0
Value	1001	0010	0000	0001

Data word = 0x9201
Stamp Number = 2
Parameter = 1

When the second telegram has been received and processed in the slave node, it is mirrored in the non-cyclic IN word back to the Interbus master controller. This is the signal to the master controller program that the second telegram of the message has been received and understood, the third telegram can now be transmitted.

Response

Bit	b15 to b12	b11 to b8	b7 to b4	b3 to b0
Value	1001	0010	0000	0001

Data word = 0x9201
Stamp Number = 2
Parameter = 1

Telegram 3

The third telegram from the Interbus master controller acts as the indication to the slave device to transmit the high data byte from the requested parameter. The data byte is not used in this telegram and should be set to 0, the stamp number is now 3.

Request

Bit	b15 to b12	b11 to b8	b7 to b4	b3 to b0
Value	1001	0011	0000	0000

Data word = 0x9300
Stamp Number = 3

When the third telegram has been received and processed in the slave node, the slave will mirror the stamp number in the non-cyclic IN word and load the high byte of the parameter value into the data byte to be transmitted back to the Interbus master controller. This is the signal to the master controller program that the third telegram of the message has been received and understood, the fourth telegram can now be transmitted.

Response

Bit	b15 to b12	b11 to b8	b7 to b4	b3 to b0
Value	1001	0011	0000	0000

Data word = 0x9300
Stamp Number = 3
Data byte = 0x00 = 0

Telegram 4

The fourth telegram from the Interbus master controller acts as the indication to the slave device to transmit the mid-high data byte (or low data byte for 16-bit parameters) from the requested parameter. The data byte is not used in this telegram and should be set to 0, the stamp number is now 4.

Request

Bit	b15 to b12	b11 to b8	b7 to b4	b3 to b0
Value	1001	0100	0000	0000

Data word = 0x9400
Stamp Number = 4

When the fourth telegram has been received and processed in the slave node, the slave will mirror the stamp number in the non-cyclic IN word and load the mid-high byte (or low byte for 16-bit parameters) of the parameter value into the data byte to be transmitted back to the Interbus master controller. This is the signal to the master controller program that the fourth telegram of the message has been received and understood. For 32-bit parameters this informs the Interbus master controller the fifth telegram can now be transmitted, but for 16-bit parameters the internal non-cyclic state machine should be reset.

Response

Bit	b15 to b12	b11 to b8	b7 to b4	b3 to b0
Value	1001	0100	0000	0001

Data word = 0x9401
Stamp Number = 4
Data byte = 0x01 = 1

Telegram 5

The fifth telegram from the Interbus master controller acts as the indication to the slave device to transmit the mid-low data byte from the requested parameter. The data byte is not used in this telegram and should be set to 0, the stamp number is now 5.

This telegram is not required for 16-bit parameter access.

Request

Bit	b15 to b12	b11 to b8	b7 to b4	b3 to b0
Value	1001	0101	0000	0000

Data word = 0x9500
Stamp Number = 5

When the fifth telegram has been received and processed in the slave node, the slave will mirror the stamp number in the non-cyclic IN word and load the mid-low byte of the parameter value into the data byte to be transmitted back to the Interbus master controller. This is the signal to the master controller program that the fifth telegram of the message has been received and understood, the sixth and final telegram can now be transmitted.

Response

Bit	b15 to b12	b11 to b8	b7 to b4	b3 to b0
Value	1001	0101	0010	0101

Data word = 0x9525
Stamp Number = 5
Data byte = 0x25 = 37

Telegram 6

The sixth telegram from the Interbus master controller acts as the indication to the slave device to transmit the low data byte from the requested parameter. The data byte is not used in this telegram and should be set to 0, the stamp number is now 6.

This telegram is not required for 16-bit parameter access.

Request

Bit	b15 to b12	b11 to b8	b7 to b4	b3 to b0
Value	1001	0110	0000	0000

Data word = 0x9600
Stamp Number = 6

When the sixth telegram has been received and processed in the slave node, the slave will mirror the stamp number in the non-cyclic IN word and load the low byte of the parameter value into the data byte to be transmitted back to the Interbus master controller. This is the signal to the master controller program that the sixth telegram of the message has been received and understood, the internal non-cyclic state machine should now be reset.

Response

Bit	b15 to b12	b11 to b8	b7 to b4	b3 to b0
Value	1001	0110	1101	1100

Data word = 0x96DC
Stamp Number = 6
Data byte = 0xDC = 220

8.1.5 The parameter re-assembled

The parameter value can be assembled as follows to give the complete value as read from the parameter.

32-bit access

Pr ***2.001*** *= (high byte * 2^{24}) + (mid-high byte * 2^{16}) + (mid-low byte * 2^{8}) + low byte*
*= (0 * 16777216) + (1 * 65536) + (37 * 256) + 220*
= 75228
= 7522.8 rpm

16-bit access

Pr ***2.001*** *= (high byte * 2^{8}) + low byte*
*= (37 * 256) + 220*
= 9692
= 969.2 rpm

When using 16-bit mode, in this example, as Pr **2.001** is a 32-bit parameter, only the lower two bytes are returned, resulting in an incorrect value being read.

8.1.6 Writing parameters using CT Single Word

To write to parameters using CT Single Word non-cyclic channel, the following “telegrams” must be transmitted to construct the final message.

- Telegram 1 Define menu number.
- Telegram 2 Define parameter number.
- Telegram 3 Send high data byte.
- Telegram 4 Send mid-high data byte (32-bit) or low data byte (16-bit).
- Telegram 5 Send mid-low data byte (32-bit).
- Telegram 6 Send low data byte (32-bit).

Figure 8-2 ***CT Single Word write sequence*** shows the normal sequence for writing a parameter value using CT Single Word non-cyclic.

Figure 8-2 CT Single Word write sequence

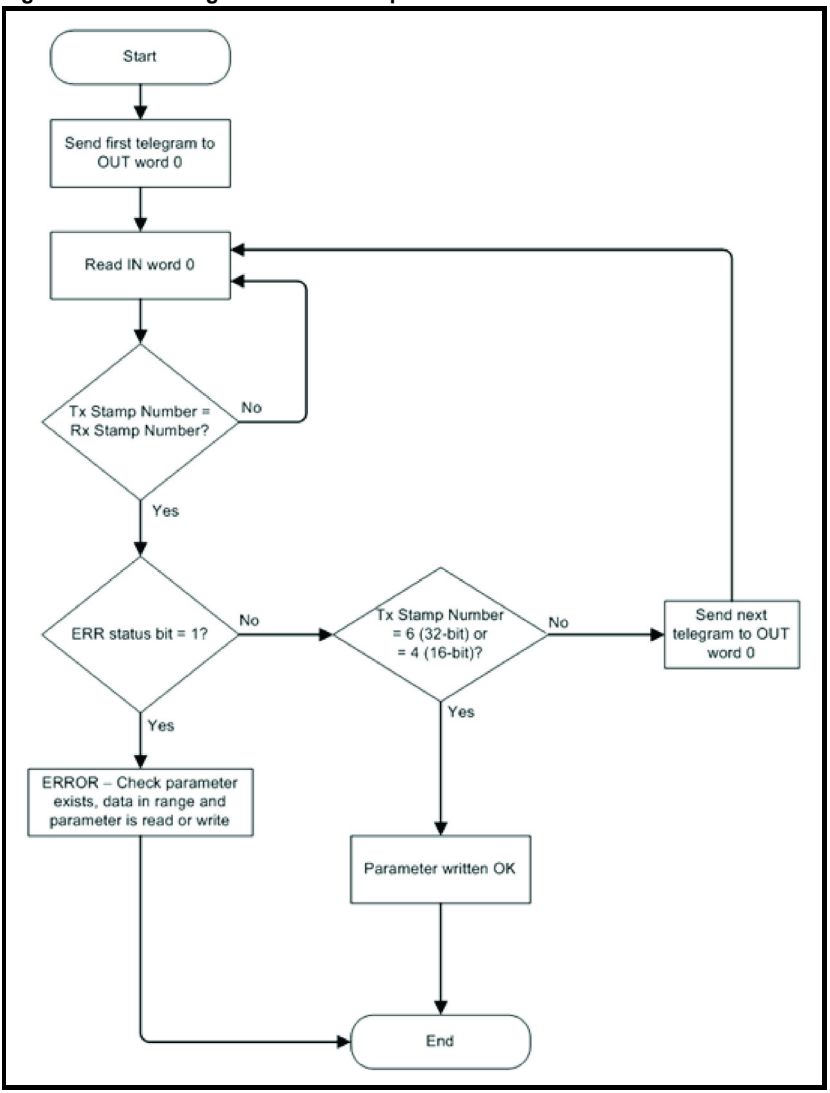

The following telegrams show how to set the preset speed reference 1 (Pr **1.021**) to 12553.9 rpm.

Telegram 1

The first telegram from the Interbus master controller indicates a WRITE cycle by setting bit b15 to 0 and stamp number 1.

The data byte contains the menu number of the parameter that is to be written to.

Request

Bit	b15 to b12	b11 to b8	b7 to b4	b3 to b0
Value	0001	0001	0000	0001

Data word = 0x1101
Stamp Number = 1
Menu = 1

When the first telegram has been received and processed in the slave node, it is mirrored in the non-cyclic IN word back to the Interbus master controller. This is the signal to the master controller program that the first telegram of the message has been received and understood, the second telegram can now be transmitted.

Response

Bit	b15 to b12	b11 to b8	b7 to b4	b3 to b0
Value	0001	0001	0000	0001

Data word = 0x1101
Stamp Number = 1
Menu = 1

Telegram 2

The second telegram from the Interbus master controller also indicates a WRITE cycle but the stamp number is now 2.

The data byte contains the parameter number of the parameter that is to be written to.

Request

Bit	b15 to b12	b11 to b8	b7 to b4	b3 to b0
Value	0001	0010	0001	0101

Data word = 0x1215
Stamp Number = 2
Parameter = 21

When the second telegram has been received and processed in the slave node, it is mirrored in the non-cyclic IN word back to the Interbus master controller. This is the signal to the master controller program that the second telegram of the message has been received and understood, the third telegram can now be transmitted.

Response

Bit	b15 to b12	b11 to b8	b7 to b4	b3 to b0
Value	0001	0010	0001	0101

Data word = 0x1215
Stamp Number = 2
Parameter = 21

Telegram 3

The third telegram from the Interbus master controller has the stamp number set to 3. The data bits contain the high data byte for the parameter being written to.

Request

Bit	b15 to b12	b11 to b8	b7 to b4	b3 to b0
Value	0001	0011	0000	0000

Data word = 0x1300
Stamp Number = 3
Data byte = 0x00 = 0

When the third telegram has been received and processed in the slave node, the slave will mirror the stamp number in the non-cyclic IN word and load the high byte of the parameter value into the data byte to be transmitted back to the Interbus master controller. This is the signal to the master controller program that the third telegram of the message has been received and understood, the fourth telegram can now be transmitted.

Response

Bit	b15 to b12	b11 to b8	b7 to b4	b3 to b0
Value	0001	0011	0000	0000

Data word = 0x1300
Stamp Number = 3
Data byte = 0x00 = 0

Telegram 4

The fourth telegram from the Interbus master controller has the stamp number set to 4 and contains the mid-high data byte (or low data byte for 16-bit parameters) for the parameter being written to.

Request

Bit	b15 to b12	b11 to b8	b7 to b4	b3 to b0
Value	0001	0100	0000	0001

Data word = 0x1401
Stamp Number = 4
Data byte = 0x01 = 1

When the fourth telegram has been received and processed in the slave node, the slave will mirror the stamp number in the non-cyclic IN word and load the mid-high byte (or low byte for 16-bit parameters) of the parameter value into the data byte to be transmitted back to the Interbus master controller. This is the signal to the master controller program that the fourth telegram of the message has been received and understood. For 32-bit parameters this informs the Interbus master controller the fifth telegram can now be transmitted, but for 16-bit parameters the internal non-cyclic state machine should be reset.

Response

Bit	b15 to b12	b11 to b8	b7 to b4	b3 to b0
Value	0001	0100	0000	0001

Data word = 0x1401
Stamp Number = 4
Data byte = 0x01 = 1

Telegram 5

The fifth telegram from the Interbus master controller has the stamp number set to 5 and contains the mid-low data byte for the parameter being written to.

This telegram is not required for 16-bit parameter access.

Request

Bit	b15 to b12	b11 to b8	b7 to b4	b3 to b0
Value	0001	0101	1110	1010

Data word = 0x15EA
Stamp Number = 5
Data byte = 0xEA = 234

When the fifth telegram has been received and processed in the slave node, the slave will mirror the stamp number in the non-cyclic IN word and load the mid-low byte of the parameter value into the data byte to be transmitted back to the Interbus master controller. This is the signal to the master controller program that the fifth telegram of the message has been received and understood, the sixth and final telegram can now be transmitted.

Response

Bit	b15 to b12	b11 to b8	b7 to b4	b3 to b0
Value	0001	0101	1110	1010

Data word = 0x15EA
Stamp Number = 5
Data mid-low byte = 0xEA = 234

Telegram 6

The sixth telegram from the Interbus master controller has the stamp number set to 6 and contains the low data byte for the parameter being written to.

This telegram is not required for 16-bit parameter access.

Request

Bit	b15 to b12	b11 to b8	b7 to b4	b3 to b0
Value	0001	0110	0110	0011

Data word = 0x1663
Stamp Number = 6
Data byte = 0x63 = 99

When the sixth telegram has been received and processed in the slave node, the slave will mirror the stamp number in the non-cyclic IN word and load the low byte of the parameter value into the data byte to be transmitted back to the Interbus master controller. This is the signal to the master controller program that the sixth telegram of the message has been received and understood, the internal non-cyclic state machine should now be reset.

Response (success)

Bit	b15 to b12	b11 to b8	b7 to b4	b3 to b0
Value	0001	0110	0110	0011

Data word = 0x1663
Stamp Number = 6
Data byte = 0x63 = 99

If all telegrams have been successful, the SI-Interbus will write the value 12553.9 to Pr **1.021**.

The value written to the parameter will be scaled according to the number of decimal places in the target parameter.

If there was a problem with writing the data to the parameter, e.g. the parameter does not exist or the data is outside the range of the parameter, the ERR bit (b14) will be set to 1.

Response (error)

Bit	b15 to b12	b11 to b8	b7 to b4	b3 to b0
Value	0101	0110	0110	0011

Data word = 0x5663
Stamp Number = 6
Data byte = 0x63 = 99

8.1.7 Abort CT Single Word non-cyclic message

The internal state machine that controls the non-cyclic data transfer will only accept a new telegram if it contains the next expected telegram stamp number (i.e. after accepting telegram 2, the state machine will only respond to telegram 3. If any other telegram stamp number is received, it will be ignored).

If an error occurs in the Interbus master controller that causes the telegrams to get out of step, the master controller program should timeout, abort the message and reset the non-cyclic state machine. This is done by setting the non-cyclic word to 0.

Request

Bit	b15 to b12	b11 to b8	b7 to b4	b3 to b0
Value	0000	0000	0000	0000

Data word = 0x0000
Stamp Number = 0
Data byte = 0x00 = 0

8.1.8 Writing 16-bit parameters

Normally six telegrams would be required to access drive parameters using CT Single Word non-cyclic data. When accessing 16-bit data only four telegrams are required.
If an attempt is made to read a 32-bit parameter from the drive, the parameter value will be returned provided that the parameter value does not exceed signed 16-bit limits.
If the value is larger than a signed 16-bit value, the ERR bit will be set.

When writing data to a 32-bit parameter, the 16-bit data will be treated as a signed 16-bit data value. This limits the range that can be written to a 32-bit parameter.

8.2 Mode 2 - PPO 4 Word mode

PPO 4 word mode of non-cyclic data is a simple method of accessing non-cyclic data without the need for the telegrams required with Mode 1 non-cyclic data and its associated overheads. Mode 2 has the disadvantage of using four words of mappings and reduces the available free mappings accordingly.

8.2.1 Mapping for PPO 4 Word non-cyclic data

To configure an SI-Interbus in slot 3 for PPO 4 Word mode non-cyclic data, the following steps must be performed:

- Set Pr **17.005** to the required mode
- Set Pr **17.032** to On to reset and reconfigure the SI-Interbus

When the SI-Interbus re-initialises, it will map cyclic data IN words 0 to 3 and OUT words 0 to 3 to the PPO 4 Word protocol parameter, Pr **61.51**. All existing mapping parameters will be moved down by one mapping, (i.e. the previous mappings set in Pr **17.010** and Pr **17.020** will now appear in Pr **17.011** and Pr **17.021** respectively).

Table 8-6 ***Six cyclic words with PPO 4 Word non-cyclic data mapping*** shows what happens to the mapping parameters when the data format is changed from 6 cyclic words (Pr **17.005**=6) to 6 cyclic words with Mode 2 non-cyclic data. (Pr **17.005**=206).

Table 8-6 Six cyclic words with PPO 4 Word non-cyclic data mapping

Mapping Parameter	Before format change (Pr 17.005 = 6)		After format change (Pr 17.005 = 6)	
	Value	Mapping	Value	Mapping
Pr **17.010**	1040	Pr **10.40**, *Status Word*	6151	Pr **61.51**, *PPO 4 Word non-cyclic mode 2*
Pr **17.011**	201	Pr **2.01**, *Post Ramp Reference*	1040	Pr **10.40**, *Status Word*
Pr **17.012**	0	*User Defined*	201	Pr **2.01**, *Post Ramp Reference*
Pr **17.013** to Pr **17.019**	0	*Not available*	0	*Not available*
Pr **17.020**	642	Pr **6.42**, *Control Word*	6151	Pr **61.51**, *PPO 4 Word non-cyclic mode 2*
Pr **17.021**	121	Pr **1.21**, *Preset Reference 1*	642	Pr **6.42**, *Control Word*
Pr **17.022**	0	*User Defined*	121	Pr **1.21**, *Preset Reference 1*
Pr **17.023** to Pr **17.029**	0	*Not available*	0	*Not available*

There are two problems with this setup, the first is that a configuration error will be raised because PPO 4 Word non-cyclic uses 4 words, so with the 6 words of cyclic data mapped, the number of mappings exceed the number specified (6). The second problem is that the user defined mappings (Pr **17.012** and Pr **17.022**) are lost when the SI-Interbus is re-initialised. This is because there is insufficient mappings available to move the user defined channel into.

To maintain all mappings when adding the PPO 4 Word non-cyclic data channel, the cyclic data format (Pr **17.005**) needs to be set to 210, this adds additional cyclic channels to accommodate the user defined channel as shown in **Table 8-7** ***Ten cyclic words with PPO 4 Word non-cyclic data mapping***.

Table 8-7 Ten cyclic words with PPO 4 Word non-cyclic data mapping

Mapping Parameter	Before format change (Pr 17.005 = 6)		After format change (Pr 17.005 = 210)	
	Value	Mapping	Value	Mapping
Pr **17.010**	1040	Pr **10.40**, *Status Word*	6151	Pr **61.51**, *PPO 4 Word non-cyclic mode 2*
Pr **17.011**	201	Pr **2.01**, *Post Ramp Reference*	1040	Pr **10.40**, *Status Word*
Pr **17.012**	0	*User Defined*	201	Pr **2.01**, *Post Ramp Reference*
Pr **17.013**	0	*Not available*	0	*User Defined*
Pr **17.014** to Pr **17.019**	0	*Not available*	0	*Not available*
Pr **17.020**	642	Pr **6.42**, *Control Word*	6151	Pr **61.51**, *PPO 4 Word non-cyclic mode 2*
Pr **17.021**	121	Pr **1.21**, *Preset Reference 1*	642	Pr **6.42**, *Control Word*
Pr **17.022**	0	*User Defined*	121	Pr **1.21**, *Preset Reference 1*
Pr **17.023**	0	*Not available*	0	*User Defined*
Pr **17.024** to Pr **17.029**	0	*Not available*	0	*Not available*

8.2.2 PPO 4 Word protocol

The PPO 4 Word protocol uses the first four words (IN and OUT) of the non-cyclic channel.

All parameter values are written as signed 32-bit data values. Decimal point information is inserted automatically when the data value is written to the drive, and removed when the data value is read.

Hence, the number of decimal places of the target parameter must be known.

Writing a value of 1234 to a parameter with 2 decimal places will produce a value of 12.34 in the target parameter. Similarly, reading a value of 12.34 will return a 32-bit integer value of 1234.

The PPO 4 Word protocol format is shown in **Table 8-8 *PPO 4 Word OUT data structure***.

Table 8-8 PPO 4 Word OUT data structure

Out Data Word	Function			
	b15 to b12	b11	b10 to b8	b7 to b0
OUT Word 0	TASK ID	0	MENU	
OUT Word 1	PARAMETER			*Reserved*
OUT Word 2	DATA HIGH word			
OUT Word 3	DATA LOW word			

The PPO 4 Word protocol is controlled by the TASK ID and RESPONSE ID; the TASK ID specifies the transaction required and the remainder of the data words carry the data for the transaction.

The possible TASK ID codes are shown in **Table 8-9 *TASK ID codes***.

Table 8-9 TASK ID codes

TASK ID	Function	Description
0	No task	No non-cyclic transaction required.
1	Fieldbus specific	
2	Fieldbus specific	
3	Fieldbus specific	
4	*Not implemented*	*Reserved*
5	*Not implemented*	*Reserved*
6	Request parameter value	Read parameter value from drive. Specify MENU and PARAMETER. Set DATA HIGH word and DATA LOW word to 0.
7	Change parameter value (16-bit)	Write 16-bit parameter value to the drive. Specify MENU, PARAMETER and DATA LOW word. (Any value in DATA HIGH word will be discarded). This function can be used to write to 32-bit drive parameters, but the range of values is limited to 16 bits.
8	Change parameter value (32-bit)	Write 32-bit parameter value to the drive. Specify MENU, PARAMETER, DATA HIGH word and DATA LOW word. This function can also be used to write to 16-bit drive parameters, but if DATA HIGH word is not set to 0, a value over-range error will be reported.
9	Request last parameter reference	Returns the last parameter number for the specified menu. Specify MENU. (Values in PARAMETER, DATA HIGH word and DATA LOW word will be discarded.)

The data structure for the response from the drive is similar to the request, the only difference is the TASK ID is replaced by the RESPONSE ID as shown in **Table 8-10 *PPO 4 Word IN data structure***.

Table 8-10 PPO 4 Word IN data structure

OUT Data Word	Function			
	b15 to b12	**b11**	**b10 to b8**	**b7 to b0**
IN Word 0	RESPONSE ID	0	MENU	
IN Word 1	PARAMETER			*Reserved*
IN Word 2	DATA HIGH word			
IN Word 3	DATA LOW word			

The RESPONSE ID indicates the success or otherwise of the requested transaction.

The possible RESPONSE ID values are shown in **Table 8-11 *RESPONSE ID codes***.

Table 8-11 RESPONSE ID codes

RESPONSE ID	Function	Description
0	No task	No non-cyclic transaction active.
1	Fieldbus specific	
2	Fieldbus specific	
3	*Not implemented*	*Reserved*
4	Transfer parameter value (16-bit)	Returns a 16-bit data value from the request parameter value specified by TASK ID 6, or the successful change parameter value (16-bit) specified by TASK ID 7.
5	Transfer parameter value (32-bit)	Returns a 32-bit data value from the request parameter value specified by TASK ID 6, or the successful change parameter value (32-bit) specified by TASK ID 8.
6	Transfer last parameter reference	Returns the highest parameter for the menu specified by request last parameter reference, TASK ID 9.
7	Error – TASK ID could not be executed	The previously specified TASK ID could not be completed. Word 3 will return an error code to indicate the reason for the TASK ID failure (see **Table 8-12 *PPO 4 Word error codes***).
8	Error – read-only parameter	Target parameter specified by TASK ID 7 or TASK ID 8 is Read-only, and cannot be modified.

If RESPONSE ID 7 has been received, the error code can be read from word 3. This will indicate the reason why the TASK ID request failed (see **Table 8-12 *PPO 4 Word error codes***).

Table 8-12 PPO 4 Word error codes

ERROR CODE	Error	Description
0	Invalid menu	The specified menu does not exist.
1	Parameter is read-only	The specified parameter is read-only, and cannot be written to.
2	Value is out of range	The specified data value is out of range for the parameter.
3	Invalid parameter or menu	The specified parameter does not exist.
18	Parameter error	No last parameter information available.

8.2.3 Reading parameters using PPO 4 Word mode

Figure 8-3 ***PPO 4 Word read sequence*** shows the sequence of events required to read a drive parameter using the PPO 4 Word non-cyclic channel.

Figure 8-3 PPO 4 Word read sequence

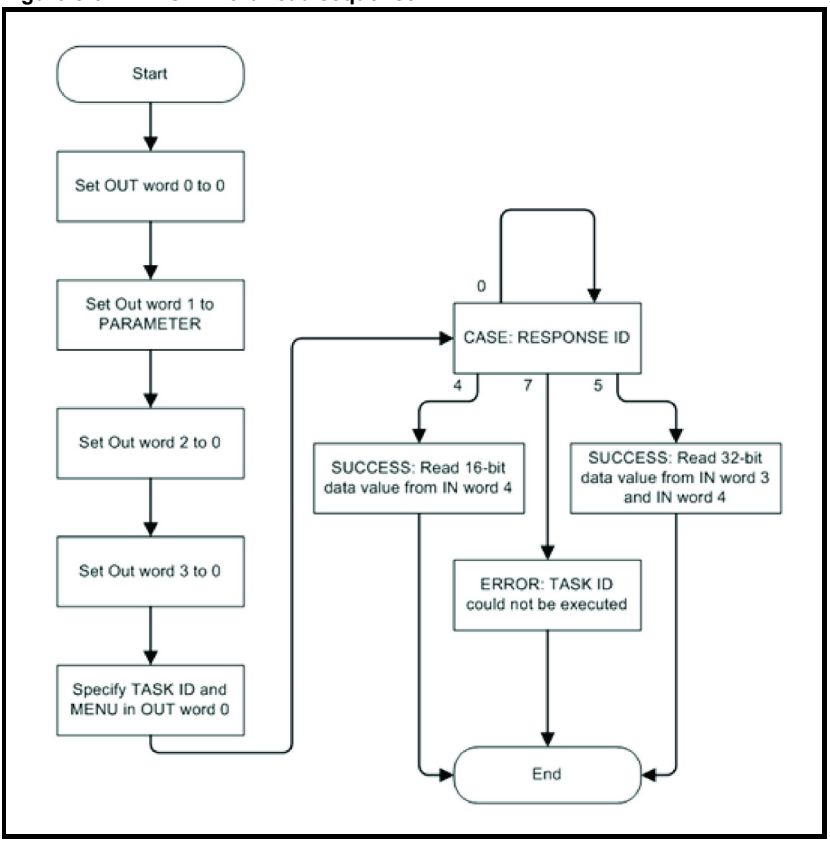

Table 8-13 ***PPO 4 Word Read TASK ID and RESPONSE ID combinations*** shows the possible TASK ID and RESPONSE ID combinations that may be seen when attempting to read a parameter value from a drive.

Table 8-13 PPO 4 Word Read TASK ID and RESPONSE ID combinations

Function	TASK ID	RESPONSE ID	Message Status
No task	0	0	No non-cyclic transaction active.
Request parameter value (16-bit)	6	4	Parameter read successfully, 16-bit value returned in word 3.
Request parameter value (32-bit)	6	5	Parameter read successfully, 32-bit value returned in words 2 and 3.
Request parameter value (16-bit)	6	7	TASK ID 6 could not be executed. Check the error code in IN word 3 for the reason why.
Request Last Parameter Reference	9	6	The highest parameter reference in specified menu is available in IN word 3.
Request Last Parameter Reference	9	7	TASK ID 9 could not be executed. Check the error code in IN word 3 for the reason why.

Table 8-14 ***PPO 4 Word read request example*** shows an example set of data words for PPO 4 Word mode. This example will read the value of the post ramp speed reference (Pr **2.001**) in the drive.

Table 8-14 PPO 4 Word read request example

OUT Data Word	Hex Value	Function			
		b15 to b12	b11	b10 to b8	b7 to b0
OUT Word 0	0x6002	TASK ID = 6	0	MENU = 2	
OUT Word 1	0x0100	PARAMETER = 1			0
OUT Word 2	0x0000	DATA HIGH word = 0			
OUT Word 3	0x0000	DATA LOW word = 0			

Table 8-15 ***PPO 4 Word read response example*** shows an example of a successful read response to the read instruction illustrated above. The value returned is 15284, which equates to 1528.4 rpm.

Table 8-15 PPO 4 Word read response example

OUT Data Word	Hex Value	Function			
		b15 to b12	b11	b10 to b8	b7 to b0
IN Word 0	0x5002	RESPONSE ID = 5	0	MENU = 2	
IN Word 1	0x0100	PARAMETER = 1			0
IN Word 2	0x0000	DATA HIGH word = 0			
IN Word 3	0x3BB4	DATA LOW word = 15284			

NOTE It is important that the correct module is selected from the XML file to ensure that the PPO 4 Word mode block is consistent otherwise data skew may occur.
If the OUT data words 0 and 1 are left at the same value, the target parameter will be read or written to (depending on the TASK ID) on every data cycle.
If the PPO 4 command is left in the data words, the read will be executed on every poll of the network, effectively providing a continuous read. Care should be taken to ensure the parameters for the read are setup before the TASK ID is changed from 0 to prevent incorrect data in the returned value.

8.2.4 Writing parameters using PPO 4 Word mode

Figure 8-4 ***PPO 4 Word write sequence*** of events required to write to a drive parameter using the PPO 4 Word non-cyclic channel.

Figure 8-4 PPO 4 Word write sequence

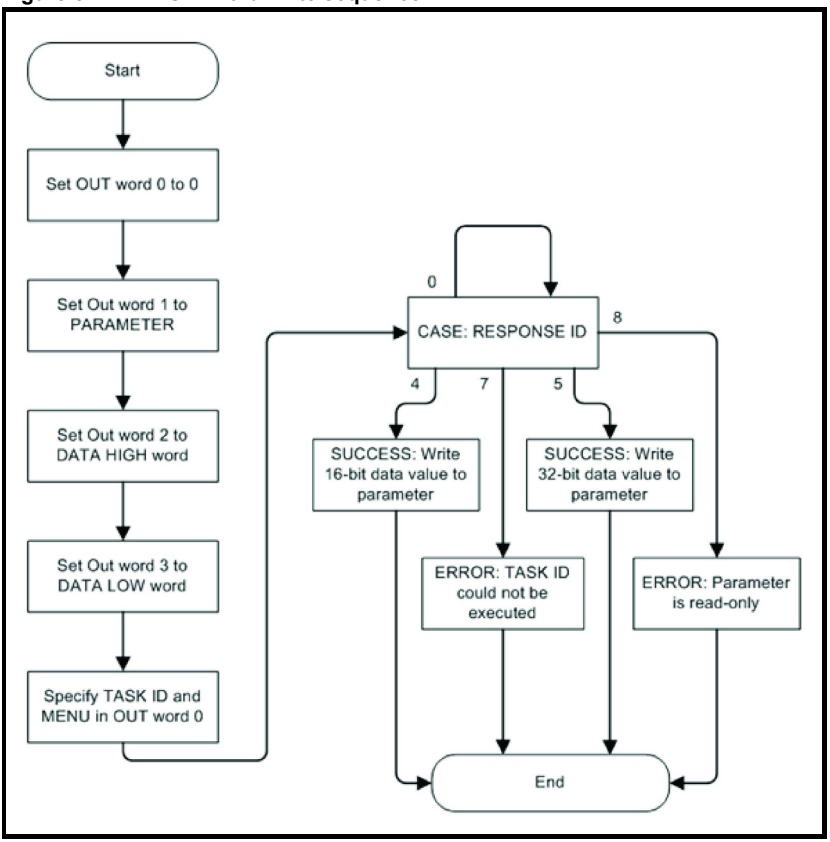

Table 8-16 ***PPO 4 Word Write TASK ID and RESPONSE ID combinations*** shows the possible TASK ID and RESPONSE ID combinations that may be seen when attempting to write to the drive.

Table 8-16 PPO 4 Word Write TASK ID and RESPONSE ID combinations

Function	TASK ID	RESPONSE ID	Message Status
No task	0	0	No non-cyclic transaction active.
Transfer parameter value (16-bit)	7	4	Parameter value (16-bit) written successfully.
Transfer parameter value (32-bit)	8	5	Parameter value (32-bit) written successfully.
Transfer parameter value (16-bit)	7	7	TASK ID 7 could not be executed. Check the error code in IN word 3 for the reason why.
Transfer parameter value (32-bit)	8	7	TASK ID 8 could not be executed. Check the error code in IN word 3 for the reason why.
Transfer parameter value (32-bit)	8	8	Parameter is read-only and cannot be written to.

Table 8-17 ***PPO 4 Word write request example*** shows an example set of data words for PPO 4 Word mode. This example will write a value of 1553.9 rpm (32-bit value is 15539) to the digital speed reference 1 (Pr **1.021**) to the drive.

Table 8-17 PPO 4 Word write request example

OUT Data Word	Hex Value	Function			
		b15 to b12	b11	b10 to b8	b7 to b0
OUT Word 0	0x8001	TASK ID = 8	0	MENU = 1	
OUT Word 1	0x1500	PARAMETER = 21			0
OUT Word 2	0x0000	DATA HIGH word = 0			
OUT Word 3	0x3CB3	DATA LOW word = 15539			

Table 8-18 ***PPO 4 Word write response example*** shows an example of a successful write response to the write instruction illustrated above in Table 8-17.

Table 8-18 PPO 4 Word write response example

OUT Data Word	Hex Value	Function			
		b15 to b12	b11	b10 to b8	b7 to b0
IN Word 0	0x5001	RESPONSE ID = 5	0	MENU = 1	
IN Word 1	0x1500	PARAMETER = 21			0
IN Word 2	0x0000	DATA HIGH word = 0			
IN Word 3	0x3CB3	DATA LOW word = 15539			

NOTE If the PPO 4 Word command is left in the data words, the write will be executed on every poll of the network, effectively providing a continuous write. Care should be taken to ensure the parameters for the write are setup before the TASK ID is changed from 0 to prevent incorrect data being written.

8.3 Mode 3 - Peripheral Communications Protocol V2.0

The PCP non-cyclic mode is an object based protocol for implementing services that are more complex than unconfirmed cyclic data transfer. If selected, the PCP protocol supported by the SI-Interbus module uses the first word of the transmitted and received data. Unlike the non-cyclic modes 1 and 2, PCP mode is not represented in the mapping parameters (Pr **MM.010** to MM.029) and can only be selected by the mode parameter (Pr **MM.005**) and not explicitly mapped.

When an Interbus network is initialised, each node supporting PCP is assigned a Communication Reference, or CR. Supported objects are shown in **Table 8-19 *PCP object specification*** and the supported services are shown in **Table 8-20 *PCP supported services***.

8.3.1 PCP object specification

Table 8-19 PCP object specification

Attribute	Setting	Value
Index	0x5000	0x5000 + Menu
Sub-index	Parameter (>0)	Parameter (>0)
Object Code	ARRAY_OBJECT	Array object
Data Type Index	INT32	Signed 32 bit value
Length	4	Four Octets
Number of Elements	200	Up to parameter 200
Password	0	None
Access Groups	0	None
Access Rights	ACC_WRITE_ALL and ACC_READ_ALL	Read and Write
Local Address	0	Not used
Variable Name	Menu	Menu
Extension	*Not supported*	*Not supported*

8.3.2 PCP supported services

Peripheral Communication Protocol (PCP) version 2.0 will be used. Only server functionality is provided.

The supported services are shown in **Table 8-20 *PCP supported services***.

Table 8-20 PCP supported services

Function	Category	Description
INITIATE	Context Management	Opens a PCP connection with the node at the defined Communication Reference.
ABORT		Closes the PCP connection with the node at the defined Communication Reference.
READ	Variable Access	Reads a number of data bytes from an Index and Sub-index reference in the remote device with the defined Communication Reference.
WRITE		Writes a specified number of data bytes to an Index and Sub-index reference in the remote device with the defined Communication Reference.
STATUS	VFD Support	Returns the current state and current operating state of the remote device at the defined Communication Reference.
IDENTIFY		Returns the "ID plates" of the device at the defined Communication Reference. The following is returned: Manufacturer_Name: “Control Techn." Device_Name: "SM-INTERBUS" Revision: "Version 01.00" (To maintain compatibility the information returned is the same as the SM-Interbus)
GET OV LONG	OV Management	Returns one or more object descriptions.

8.3.3 Accessing drive parameters using the PCP objects

The supported objects permit the user to read or write to any parameter that supports that action, i.e. the user could not write to a read only parameter. Each object will represent a drive menu numbered from 0 to 200. The user will provide a sub-index within either the READ or WRITE service to access a specific parameter.

The objects will represent the Menus as follows:
Object = Menu + 0x5000

The sub-index will equate to the required parameter number within the specified menu.

The only exception to this is parameter zero, (Pr **MM.000**) this can be accessed using the virtual parameter Pr **61.001**. A sub-index value of zero will return an error (see **Table 8-23** ***Control Techniques defined service error codes***).

8.3.3.1 READ object

Index: 0x5000 + Menu
Sub-index: Parameter

The READ object is used to read a value from a parameter within the drive.
No additional data bytes are required. If the read is successful, a success response will be returned, with four data bytes containing the value of the target parameter.

Table 8-21 PCP READ response data bytes

Data Byte	Data Byte Order
1	High byte
2	Mid-high byte
3	Mid-low byte
4	Low byte

If an error occurs, an error message is returned, with codes to indicate the reason for failure (see **Table 8-23** ***Control Techniques defined service error codes***).

NOTE Parameter 0 (Pr **MM.000**) cannot be accessed directly as the sub-index cannot be set to a value of 0. Access to parameter 0 is provided via virtual parameter Pr **61.01**.

Example

This example reads the value from the Post Ramp Reference (Pr **2.001**) using the READ service with the following arguments:

Index = 0x5002
Sub-index = 1

If the read is successful, the response message would contain the data value.

If the service is unsuccessful, the error information will be returned (see **section 8-23** ***Control Techniques defined service error codes***).

8.3.3.2 WRITE object

Index: 0x5000 + Menu
Sub-index: Parameter

The WRITE object is used to send a data value to a parameter within the drive.
Four data bytes are written to this object. If the write is successful, a success response will be returned.

Table 8-22 PCP WRITE object data bytes

Data Byte	Data Byte Order
1	High byte
2	Mid-high byte
3	Mid-low byte
4	Low byte

If an error occurs, an error message is returned, with codes to indicate the reason for failure (see **Table 8-23** ***Control Techniques defined service error codes***).

NOTE Parameter 0 (Pr **MM.000**) cannot be accessed directly as the sub-index cannot be set to a value of 0. Access to parameter 0 is provided via virtual parameter Pr **61.01**.

Example

This example writes the value 200 (rpm) to the Preset Reference 1 (Pr **1.021**) using the WRITE service with the following arguments:

Index = 0x5001
Sub-index = 21
Data = 200

If the write is successful, the success response will be returned.

If the service is unsuccessful, the error information will be returned. See **Table 8-23** ***Control Techniques defined service error codes***.

Any scaling required of the data (i.e. to account for any decimal places the parameter may have) will be handled by the SI-Interbus module.

8.3.3.3 Service error codes

If an error occurs while accessing a parameter, a Control Techniques defined error code will be returned. These error codes are listed in **Table 8-23** ***Control Techniques defined service error codes***.

Table 8-23 Control Techniques defined service error codes

Error	Error Class	Error Code	Additional Error Code
Parameter Does Not Exist	0x08 (Non-standard error)	0x01	0x00 (No additional information)
Parameter Is Read Only	0x08 (Non-standard error)	0x02	0x00 (No additional information)
Parameter Is Write Only	0x08 (Non-standard error)	0x03	0x00 (No additional information)
Value Outside Permitted Range	0x08 (Non-standard error)	0x04	0x00 (No additional information)
Decimal Place Error	0x08 (Non-standard error)	0x05	0x00 (No additional information)
Sub-index Zero Access Error	0x06 (Access error)	0x05	0x11 (Attempt to access sub-index zero)

8.3.4 SI-Interbus setup using non-cyclic data

The SI-Interbus can be configured using the PCP channel, CT Single Word or PPO 4 Word non-cyclic data. The configuration parameters for the slot in which the SI-Interbus is located can be accessed using the virtual menu 60 (see **section 9.1** ***Pr 60.01 to Pr 60.56 (Setup menu shortcut)***).

Changes made to the SI-Interbus configuration parameters will not take effect until the SI-Interbus has been reset (see **section 7.3** ***Module reset***).

A brief interruption in Interbus communications may be seen while the reset sequence is in progress.

9 Virtual menus

The SI-Interbus module has two internal virtual menus that the user can access over the fieldbus network, the virtual menu parameters are shown in **Table 9-1** ***Virtual menu parameters***.

Table 9-1 Virtual menu parameters

Parameter	Description
Pr **60.01** to Pr **60.56**	Slot 1 SI-Interbus setup menu Pr **15.001** to **15.056**
	Slot 2 SI-Interbus setup menu Pr **16.001** to **16.056**
	Slot 3 SI-Interbus setup menu Pr **17.001** to **17.056**
Pr **61.01**	Parameter 0 access, mapped directly to Pr **1.000**
Pr **61.40**	SI-Applications (or MCi2x0) Event trigger (lowest slot)
Pr **61.41**	SI-Applications (or MCi2x0) Event trigger (slot 1)
Pr **61.42**	SI-Applications (or MCi2x0) Event trigger (slot 2)
Pr **61.43**	SI-Applications (or MCi2x0) Event trigger (slot 3)
Pr **61.50**	CT Single word (Mode 1) non-cyclic data mapping parameter
Pr **61.51**	PPO 4 word (Mode 2) non-cyclic data mapping parameter

9.1 Pr 60.01 to Pr 60.56 (Setup menu shortcut)

Menu 60 acts as a shortcut to the SI-Interbus module setup menu (menus 15, 16 or 17) for the slot in which the Interbus module is located. The SI-Interbus will redirect any menu 60 parameter access sent over the fieldbus to the menu 15, 16 or 17 as appropriate. This permits the user to configure the SI-Interbus via the fieldbus without knowing in which slot it is located.

9.2 Pr 61.01 (Parameter 0 access)

Pr **61.01** acts as a shortcut to parameter 0 and is directly mapped to Pr **1.000**.

9.3 Pr 61.40 (Event trigger - lowest slot)

Pr **61.40** is used to trigger an event task in the SI-Applications (or MCi2x0) module fitted in the lowest slot position. The possible values are shown in **Table 9-2** ***Event trigger values***.

9.4 Pr 61.41 (Event trigger – slot 1)

Pr **61.41** is used to trigger an event task in the SI-Applications (or MCi2x0) module fitted in slot 1. The possible values are shown in **Table 9-2** ***Event trigger values***.

9.5 Pr 61.42 (Event trigger – slot 2)

Pr **61.42** is used to trigger an event task in the SI-Applications (or MCi2x0) module fitted in slot 2. The possible values are shown in **Table 9-2** ***Event trigger values***.

9.6 Pr 61.43 (Event trigger – slot 3)

Pr **61.43** is used to trigger an event task in the SI-Applications (or MCi2x0) module fitted in slot 3. The possible values are shown in **Table 9-2 *Event trigger values***.

Table 9-2 Event trigger values

Trigger Parameter Value	Action
0	No action
1	Event
2	Event 1
3	Event 2
4	Event 3

9.7 Pr 61.50 (CT Single Word - mode 1 non-cyclic)

Pr **61.50** is used as the CT Single Word (mode 1) non-cyclic parameter (see **section 8.1 *Mode 1 - CT Single Word mode***).

9.8 Pr 61.51 (PPO 4 Word – mode 2 non-cyclic)

Pr **61.51** is used as the PPO 4 Word (mode 2) non-cyclic parameter (see **section 8.2 *Mode 2 - PPO 4 Word mode***).

10 SI-Applications parameters

The SI-Interbus will redirect any menu accesses, for menus 70 to 91, to the SI-Applications (or MCi2x0) module in the lowest numbered slot. This is convenient to use if there is only the one SI-Applications (or MCi2x0) module fitted to the drive, as it guarantees that data will always be written to or read from the module even if it was moved to a different slot position.

If more than one SI-Applications (or MCi2x0) option module is fitted then, to ensure the correct module is accessed, it will be necessary to access the module in a specific slot directly, this is achieved by using the slot specific menus 100 to 121, 130 to 151 and 160 to 181 for menus 70 to 91 in slots 1 to 3 respectively.

Note that only the PLC registers (menus 70 to 79) are available in the MCi2x0 module.

Table 10-1 Applications parameters

SI-Applications Parameters	SI-Apps Compact	MCi2x0	Parameter Reference	Direct to slot 1	Direct to slot 2	Direct to slot 3
_Pxx% PLC registers	Yes	Yes	Pr **70.xx**	Pr **100.xx**	Pr **130.xx**	Pr **160.xx**
_Qxx% PLC Registers	Yes	Yes	Pr **71.xx**	Pr **101.xx**	Pr **131.xx**	Pr **161.xx**
_Rxx% PLC Registers	Yes	Yes	Pr **72.xx**	Pr **102.xx**	Pr **132.xx**	Pr **162.xx**
_Sxx% PLC Registers	Yes	Yes	Pr **73.xx**	Pr **103.xx**	Pr **133.xx**	Pr **163.xx**
_Txx% PLC Registers	Yes	Yes	Pr **74.xx**	Pr **104.xx**	Pr **134.xx**	Pr **164.xx**
_Uxx% PLC Registers	Yes	Yes	Pr **75.xx**	Pr **105.xx**	Pr **135.xx**	Pr **165.xx**
_Vxx% PLC Registers	Yes	Yes	Pr **76.xx**	Pr **106.xx**	Pr **136.xx**	Pr **166.xx**
_Wxx% PLC Registers	Yes	Yes	Pr **77.xx**	Pr **107.xx**	Pr **137.xx**	Pr **167.xx**
_Xxx% PLC Registers	Yes	Yes	Pr **78.xx**	Pr **108.xx**	Pr **138.xx**	Pr **168.xx**
_Yxx% PLC Registers	Yes	Yes	Pr **79.xx**	Pr **109.xx**	Pr **139.xx**	Pr **169.xx**
Local Configuration Parameters	Yes	No	Pr **81.xx**	Pr **111.xx**	Pr **141.xx**	Pr **171.xx**
Timer Configuration Parameters	Yes	No	Pr **85.xx**	Pr **115.xx**	Pr **145.xx**	Pr **175.xx**
Digital IO Parameters	Yes	No	Pr **86.xx**	Pr **116.xx**	Pr **146.xx**	Pr **176.xx**
Status Parameters	Yes	No	Pr **88.xx**	Pr **118.xx**	Pr **148.xx**	Pr **178.xx**
General Parameters	Yes	No	Pr **90.xx**	Pr **120.xx**	Pr **150.xx**	Pr **180.xx**
Fast Access Parameters	Yes	No	Pr **91.xx**	Pr **121.xx**	Pr **151.xx**	Pr **181.xx**

10.1 Single SI-Applications fitted

Consider a drive with the following configuration:

- Slot 1 - Vacant
- Slot 2 - SI-Interbus
- Slot 3 - SI-Applications

If a parameter read request comes over Interbus to read Pr **71.08**, this will be redirected to the SI-Applications in the lowest slot number, i.e. the SI-Applications in slot 3. The value in _Q08% from slot 3 will be returned.

If a parameter read request comes over Interbus to read Pr **161.08**, this will be sent straight to the SI-Applications in slot 3. The value in _Q08% from slot 3 will be returned.

If a parameter read request comes over Interbus to read Pr **101.08**, this will be sent straight to slot 1. As there is no module fitted in slot 1, an error message will be returned, indicating that the parameter does not exist.

10.2 Dual SI-Applications fitted

This scenario involves two SI-Applications or MCi2x0 modules (or one of each).

Consider a drive with the following configuration:

- Slot 1 – MCi2x0
- Slot 2 - SI-Interbus
- Slot 3 - SI-Applications

If a parameter read request comes over Interbus to read Pr **71.08**, this will be redirected to the module in the lowest slot number, i.e. the MCi2x0 in slot 1. The value in _Q08% from slot 1 will be returned.

If a parameter read request comes over Interbus to read Pr **101.08**, this will be sent straight to the MCi2x0 in slot 1. The value in _Q08% from slot 1 will be returned.

If a parameter read request comes over Interbus to read Pr **161.08**, this will be sent straight to the SI-Applications in slot 3. The value in _Q08% from slot 3 will be returned.

If a parameter read request comes over Interbus to read Pr **131.08**, this will be sent straight to slot 2. As there is no appropriate module fitted in slot 2 (i.e. SI-Applications or MCi2x0), an error message will be returned, indicating that the parameter does not exist.

NOTE When two SI-Applications or MCi2x0 modules (or one of each) is fitted, it is advisable to use the direct slot access parameters to ensure the correct, and intended, module is accessed.

11 Control / status word

The control and status words allow the digital control and monitoring of the drive to be implemented using a single data word for each function. Each bit in the control word has a particular function and provides a method of controlling the output functions of the drive, such as run and direction.

Each bit in the status word provides feedback about the drive's state of health and operational condition, such as drive ok, drive at speed, etc.

The default cyclic data mappings of the SI-Interbus module use the drive control word (Pr **06.042**) and preset reference 1 (Pr **01.021**) for the OUT data, and the drive status word (Pr **10.040**) and post ramp reference (Pr **02.001**) for the IN data.

If the drive control word is to be used for controlling the drive over the Interbus network, then the control word must be enabled (Pr **06.043** = On).

11.1 Control word

The control word consists of sixteen control bits, some of which are reserved.

Table 11-1 ***Control word bit functions*** shows the functions of each bit in the control word, and **Table 11-2** ***Control word bit definitions*** shows the functions of each control bit in more detail. For further details about the drive control word and sequencing bits please refer to the appropriate drive documentation.

Table 11-1 Control word bit functions

b15	b14	b13	b12	b11	b10	b9	b8
Reserved	KEYPAD WDOG	RESET	TRIP	*Reserved*	*Reserved*	JOG REV	REMOTE

b7	b6	b5	b4	b3	b2	b1	b0
AUTO	NOT STOP	RUN	FWD/REV	RUN REV	JOG RWD	RUN FWD	ENABLE

To enable fieldbus control, the Control Word Enable (Pr **06.043**) must be set to 'On', the source of the control signals (RUN, FWD/REV. JOG, etc.) is selected using the AUTO bit (b7). When the AUTO bit (b7) is set to '1', the control word is used as the source for the drive control. When the AUTO bit (b7) is set to 0, the drive will revert to terminal control.

For safety reasons, the external SAFE TORQUE OFF signal must be present before the fieldbus control word can be used to start the drive. This signal is normally provided by an external "Emergency Stop" circuit to ensure that the drive is disabled in an emergency situation.

The control word REMOTE bit (b8) directly controls the drive parameter Pr **01.042**, the function of which is to select the digital speed reference as the source of the drive's speed reference. When the REMOTE bit (b8) is set to 1 the fieldbus speed reference will be used. When the REMOTE bit (b8) is set to 0 the drive will revert to using the external analog speed reference.

The default digital speed reference selected when REMOTE is set to 1 will be Pr **01.021**, however Pr **01.015** can be used to change which of the digital references is selected. For further details on the drive digital speed reference, please refer to the appropriate drive documentation.

Table 11-2 Control word bit definitions

Bit	Function	Description
b0	ENABLE	Set to 1 to enable the drive. Resetting to 0 will immediately disable the drive, and the motor will coast to a stop. The external SAFE TORQUE OFF signal must also be present before the drive can be enabled.
b1	RUN FWD	Set to 1 (with ENABLE set to 1) to run the motor in the forward direction. When reset to 0, the drive will decelerate the motor to a controlled stop.
b2	JOG FWD	Set to 1 to jog the motor forward. This signal needs to be used in conjunction with the ENABLE bit. This signal is overridden by a RUN, RUN REV or RUN FWD signal
b3	RUN REV	Set to 1 (with ENABLE set to 1) to run the motor in the reverse direction. When reset to 0, the drive will decelerate the motor to a controlled stop
b4	FWD/REV	Set to 1 to select the reverse direction. Set to 0 to run in the forward direction. The RUN signal is used to start and stop the motor.
b5	RUN	Set to 1 to run the motor. FWD/REV is used to select the direction of motor rotation. When reset to 0, the drive will decelerate the motor to a controlled stop.
b6	NOT STOP	Set to 1 to allow the sequencing bit to be latched. If NOT STOP is zero, all latches are cleared and held at 0.
b7	AUTO	Set to 1 to enable fieldbus control of the drive Control Word. The Control Word Enable (Pr **06.043**) must also be set to 1. When set to 0, the drive will operate under terminal control.
b8	REMOTE	Set to 1 to select digital speed reference 1 (Pr **01.021**), and set to 0 to select analog reference 1 (Pr **01.036**). REMOTE directly controls Pr **01.042**, so reference selector (Pr **01.014**) and preset selector (Pr **01.015**) must both be set to 0 (default) for the REMOTE bit to work properly.
b9	JOG REV	Set to 1 to jog the motor in reverse. This signal needs to be used in conjunction with the ENABLE bit. This signal is overridden by a RUN, RUN REV or RUN FWD command.
b10	*Reserved*	
b11	*Reserved*	
b12	TRIP	Set to 1 to trip the drive at any time. The trip display on the drive will be 'Control Word' and the trip code will be 35. AUTO (b7) has no effect on this function. The trip cannot be cleared until TRIP is reset to 0.
b13	RESET	A 0 to 1 transition of the RESET bit will reset the drive from a trip condition. If the reason for the trip is still present, or another fault has been detected, the drive will immediately trip again. When resetting the drive, it is recommended to check the status word to ensure that the reset was successful, before attempting to re-start the drive.

Bit	Function	Description
b14	KEYPAD WDOG	This watchdog is provided for an external keypad or other devices where a break in the communication link must be detected. The watchdog system can be enabled and/or serviced if this bit is changed from zero to one while the control word is enabled. Once the watchdog is enabled it must be serviced at least once every second or a 'Watchdog' trip will occur (trip code 30). The watchdog is disabled when a 'Watchdog' trip occurs, and so it must be re-enabled when the trip is reset.
b15	*Reserved*	

11.2 Status word

The status word consists of sixteen status bits and provides status information about the running conditions of the drive.

Table 11-3 ***Status word bit definitions*** shows the function of each status word bit. For further details about the drive status word please refer to the appropriate drive documentation.

Table 11-3 Status word bit definitions

b15	b14	b13	b12	b11	b10	b9	b8
	Pr **10.015**	Pr **10.014**	Pr **10.013**	Pr **10.012**	Pr **10.011**	Pr **10.010**	Pr **10.009**

b7	b6	b5	b4	b3	b2	b1	b0
Pr **10.008**	Pr **10.007**	Pr **10.006**	Pr **10.005**	Pr **10.004**	Pr **10.003**	Pr **10.002**	Pr **10.001**

Table 11-4 Drive status parameters

Parameter	Description
Pr **10.001**	Drive OK
Pr **10.002**	Drive active
Pr **10.003**	Zero speed
Pr **10.004**	Running at or below minimum speed
Pr **10.005**	Below set speed
Pr **10.006**	At speed
Pr **10.007**	Above set speed
Pr **10.008**	Rated load reached
Pr **10.009**	Current limit active
Pr **10.010**	Regenerating
Pr **10.011**	Braking IGBT active
Pr **10.012**	Braking resistor alarm
Pr **10.013**	Reverse direction commanded
Pr **10.014**	Reverse direction running
Pr **10.015**	Supply loss

12 Diagnostics

This section details the SI-Interbus parameters which can be used to assist in diagnosing any issues which may be encountered relating to the SI-Interbus module, Interbus network or SI-Interbus mapping configuration.

12.1 Module ID code

SI-Interbus Module ID		
Pr **MM.001**	Default	404 (500 kBd) or 414 (2 MBd)
	Type	16-bit
	Access	RO

The SI-Interbus module displays the module ID code in Pr **MM.001**, this module ID code is used to identify the module variant.

12.2 Firmware version

SI-Interbus Firmware Version		
Pr **MM.002**	Default	None
	Type	32-bit
	Access	RO

Pr **MM.002** displays the SI-Interbus firmware version in the form ww.xx.yy.zz.

12.3 Interbus operating status

The Interbus network activity can be monitored in the operating status parameter, Pr **MM.006**.

When the SI-Interbus is communicating successfully with the Interbus master controller, the operating status will give an indication of the number of cyclic data messages per second that are being processed.

Interbus Operating Status		
Pr **MM.006**	Default	None
	Type	16-bit
	Access	RO

If Pr **MM.006** is a negative value, this indicates a non-operational state as shown in the following table.

Table 12-1 Interbus operating status

Pr MM006	Description
> 0	Network healthy, displays the number of messages processed per second
0	Network health, no cyclic data transfer
-1	SI-Interbus has initialised correctly and waiting for the Interbus master to initialise communication
-2	The SI-Interbus module reports an internal hardware fault
-3	Configuration error, invalid setting in the SI-Interbus configuration parameters

If Pr **MM.006** shows a positive value, this value is dependent upon the Interbus network communication speed, number of mappings and whether non-cyclic communications are active or not.

12.4 SI-Interbus serial number

The SI-Interbus module serial number is a 10-digit decimal number loaded during manufacture and cannot be changed. Two parameters are used to display the serial number, Pr **MM.035** displays the last 8 digits and Pr **MM.055** displays the first 2 digits.

SI-Interbus Serial Number LS		
Pr **MM.035**	Default	None
	Type	32-bit
	Access	RO

This parameter contains the last 8 digits of the serial number.

SI-Interbus Serial Number MS		
Pr **MM.055**	Default	None
	Type	32-bit
	Access	RO

This parameter contains the first 2 digits of the serial number.

12.5 Cyclic data mapping status

Cyclic Mapping Status		
Pr **MM.049**	Default	None
	Type	8-bit
	Access	RO

The SI-Interbus mapping status parameter, Pr **MM.049** displays the status of the mapping configuration as shown in **Table 12-2** ***Mapping status codes***. If a mapping error has been corrected, reset the SI-Interbus by setting Pr **MM.032** to On.

NOTE If the mapping configuration size has changed (Pr **MM.005** *Interbus Data Format*), then the module reset is insufficient to fully initialise the Interbus network and after saving parameters, the module must be power-cycled.

Table 12-2 Mapping status codes

Code	Meaning	Description
0	No error detected	No error detected with IN or OUT cyclic data mapping configuration.
2	Direct data mapping error	Non-cyclic data cannot be used when direct data mapping is enabled.
3	Invalid non-cyclic mode	An invalid non-cyclic mode has been selected in Pr **MM.005**.
5	Invalid mode value	The value entered in Pr **MM.005** is not supported.
104	Multiple non-cyclic mapping error	A non-cyclic data mode has been mapped more than once in the IN data mapping configuration parameters (Pr **MM.010** to Pr **MM.019**).
110	Configuration read error	An error has occurred reading the IN cyclic data mapping configuration parameters (Pr **MM.010** to Pr **MM.019**) from the drive.

Code	Meaning	Description
111	Invalid source parameter	One or more parameters specified in the IN cyclic data mapping configuration parameters (Pr **MM.010** to Pr **MM.019**) is outside of the allowed range for Interbus. The allowed parameter range is from Pr **0.00** to 199.99.
112	Read mismatch	One or more parameters specified in the IN cyclic data mapping configuration parameters (Pr **MM.010** to Pr **MM.019**) cannot be used as a source parameter for IN data. The parameter may not exist, or is a write-only parameter.
113	Hole in IN data mapping configuration	IN cyclic data mapping parameters (Pr **MM.010** to Pr **MM.019**) are not contiguous. It is not possible have an un-used parameter in the middle of the cyclic data.
115	Inter-option communications error	A request to set up an inter-option communications read block failed. Either the server does not support block transfer or parameters were not legal.
120	Too many IN data objects mapped	After expanding ranges of block mappings, too many IN cyclic data channels configured.
121	Mapping over length	Total size of all IN cyclic data mappings has exceeded the total size of the cyclic data.
122	Register mode objects exceeded	More than 10 cyclic IN data channels have been selected with direct data mapping mode.
204	Multiple non-cyclic mapping error	A non-cyclic data mode has been mapped more than once in the OUT cyclic data mapping configuration parameters (Pr **MM.020** to Pr **MM.029**).
210	Configuration read error	An error has occurred reading the OUT cyclic data mapping configuration parameters (Pr **MM.020** to Pr **MM.029**) from the drive.
211	Invalid destination parameter	One or more parameters specified in the OUT cyclic data mapping configuration parameters (Pr **MM.020** to Pr **MM.029**) is outside of the allowed range for Interbus. The allowable parameter range is from Pr **0.00** to Pr **199.99**.
212	Write mismatch	One or more parameters specified in the OUT cyclic data mapping configuration parameters (Pr **MM.020** to Pr **MM.029**) cannot be used as a destination parameter for OUT data. The parameter may not exist, or is a read-only parameter. This error will also occur if an attempt is made to map OUT data to the configuration parameters of a fieldbus option in another slot, unless that fieldbus is configured in register mode, i.e. Pr **MM.009** = On.
213	Hole in OUT data mapping configuration	OUT data mapping parameters (Pr **MM.020** to Pr **MM.029**) are not contiguous. It is not possible have an un-used parameter in the middle of the cyclic data.
214	Duplicate mapping error	Two or more OUT cyclic data mapping configuration parameters (Pr **MM.020** to Pr **MM.029**) have been configured with the same destination parameter reference.
215	Inter-option communications error	A request to set up an inter-option communications write block failed. Either the server does not support block transfer or parameters were not legal.
220	Too many OUT data objects mapped	After expanding ranges of block mappings, too many OUT cyclic data channels configured.
221	Mapping over length	Total size of all OUT cyclic data mappings has exceeded the total size of the cyclic data.
222	Register mode objects exceeded	More than 10 cyclic OUT data channels have been selected.

12.6 Module error status

Module Error Status		
Pr **MM.050**	Default	None
	Type	8-bit
	Access	RO

If SI-Interbus detects an error during operation, it will force a trip in the drive, and write the error code into this parameter.

Table 12-3 Module error codes

Code	Fault	Description
0	No error detected	Indicates that the trip was not caused by the SI-Interbus. It is possible to trip the drive externally via various communication channels.
52	User control word trip	The TRIP bit has been set in the control word.
61	Configuration error	An invalid configuration has been detected. Refer to Pr **MM.049** for configuration error codes.
65	Network loss	No new messages have been received for the specified network loss trip time.
70	FLASH transfer error	The SI-Interbus was unable to upload the configuration parameters from its FLASH memory to the drive.
74	SI-Interbus overtemperature	If the temperature inside the SI-Interbus exceeds 82 °C, the SI-Interbus will trip the drive.
80	Inter-option communication error	Communications time-out has occurred, but SI-Interbus is unable to determine the reason for the error.
81	Communication error to slot 1	Direct communications between SI-Interbus and an SI-Applications (or MCi2x0) in another slot has timed out. This can occur when the SI-Interbus has been mapped to directly read or write the PLC (_P, _Q, _R, _S, _T, _U, _V, _W, _X or _Y) registers in an SI-Applications (or MCi2x0) and the relevant option module has been reset.
82	Communication error to slot 2	
83	Communication error to slot 3	
98	Internal watchdog error	Internal error. Cycle power to the drive to reset from this trip. If trip persists, replace the SI-Interbus.
99	Internal software error	

12.7 Background cycles per second

Background Cycles Per Second		
Pr **MM.052**	Default	None
	Type	8-bit
	Access	RO

This parameter displays the number of background cycles processed each second.

12.8 PCB temperature

PCB Temperature		
Pr **MM.053**	Default	None
	Type	8-bit
	Access	RO

This parameter displays the temperature of the module in °C.

12.9 Hardware version

Hardware Version		
Pr **MM.054**	Default	None
	Type	16-bit
	Access	RO

This parameter displays the module hardware revision number.

12.10 Date code

Manufacture Date Code		
Pr **MM.056**	Default	None
	Type	16-bit
	Access	RO

This parameter contains the date code of manufacture and is loaded into the module during manufacture and cannot be changed.

The date code is a four-digit number in the form YYMM, where YY represents the year and MM represents the month of manufacture.

For example, a date code of 1910 would indicate a manufactured date of October 2019.

NOTE This format differs from the date code as printed on the module and packing carton labels which are in the form YYWW, where YY represents the year and WW represents the week number of manufacture.

12.11 Status LEDs

The SI-Interbus has 6 status LEDs that allow visual diagnostics of the SI-Interbus module and network. The LEDs can be seen through the ventilation holes on top of the plastic case, as shown in **Figure 12-1** ***Status LEDs***.

Figure 12-1 Status LEDs

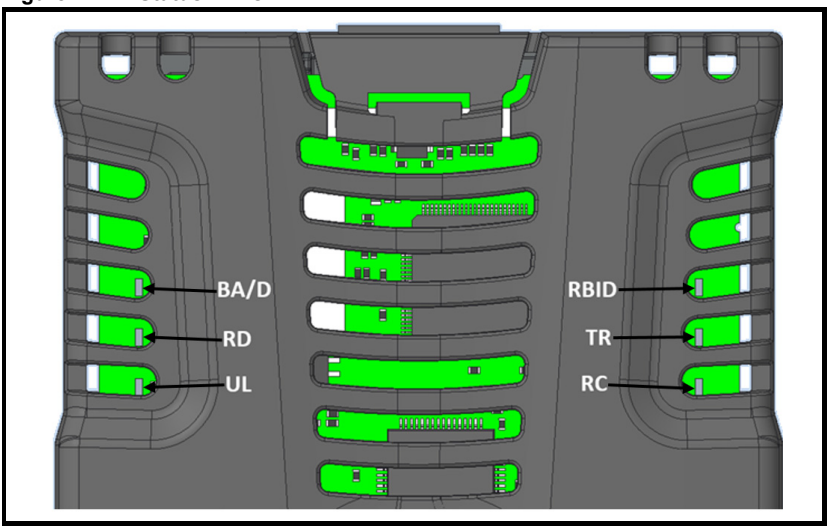

The LED status functions are described in **Table 12-4** ***LED status functions***.

Table 12-4 LED status functions

Name	Colour	Function	Description
BA/D	Green	Bus Active or Interbus Diagnostic active	Either the Interbus network or the remote diagnostics is active.
RBID	Red	Remote Bus Isolated or Disconnected	The Remote bus OUT interface is isolated or disconnected.
RD	Yellow	Remote bus Disabled	Indicates the disconnection of the outgoing remote bus. Only relevant for remote bus devices and is active in the "INTERBUS reset" state.
TR	Green	Transmit / Receive	A PCP message is active.
UL	Green	User LED	SI-Interbus is powered up.
RC	Green	Remote bus Check	Monitors bus activity on layer 1 of the incoming bus. RC is active when the incoming cable is connected and the Interbus controller is not in a reset state. RC becomes inactive after an Interbus reset, layer 2 timeout or power-up reset.

12.12 LED operating sequence

The following table shows the normal state of each of the status LEDs for particular operational states.

Table 12-5 LED operating sequence

Operating State	BA/D	RBID	RD	TR	UL	RC
Power-on, Initialised (Interbus network disconnected)	x	x	✓	x	✓	x
Interbus network connected and in reset state	x	x	✓	x	✓	✓
Interbus network connected and not in reset state (running)	✓	x	x	x	✓	✓
Interbus network disconnected	x	x	✓	x	✓	x

13 Single line setup parameter descriptions

Table 13-1 Setup menu

Pr	Function	Deafult Value
MM.001	Option Module ID Code	404 (500 kBd) or 414 (2 MBd)
MM.002	Firmware Version Vww.xx.yy.zz	-
MM.005	Interbus Data Format (Mode)	4 (4 cyclic words)
MM.006	Interbus Operating Status	-
MM.007	Network Loss Trip Timeout (ms)	200 (ms)
MM.009	Direct Data Mapping Enabled	Off (disabled)
MM.010	Cyclic Input 1 Mapping	1040 (Status word Pr **10.040**)
MM.011	Cyclic Input 2 Mapping	201 (Post Ramp Reference Pr **2.001**)
MM.012	Cyclic Input 3 Mapping	0 (Disabled)
MM.013	Cyclic Input 4 Mapping	0 (Disabled)
MM.014	Cyclic Input 5 Mapping	0 (Disabled)
MM.015	Cyclic Input 6 Mapping	0 (Disabled)
MM.016	Cyclic Input 7 Mapping	0 (Disabled)
MM.017	Cyclic Input 8 Mapping	0 (Disabled)
MM.018	Cyclic Input 9 Mapping	0 (Disabled)
MM.019	Cyclic Input 10 Mapping	0 (Disabled)
MM.020	Cyclic Output 1 Mapping	642 (Control word Pr **6.042**)
MM.021	Cyclic Output 2 Mapping	121 (Preset Reference 1 Pr **1.021**)
MM.022	Cyclic Output 3 Mapping	0 (Disabled)
MM.023	Cyclic Output 4 Mapping	0 (Disabled)
MM.024	Cyclic Output 5 Mapping	0 (Disabled)
MM.025	Cyclic Output 6 Mapping	0 (Disabled)
MM.026	Cyclic Output 7 Mapping	0 (Disabled)
MM.027	Cyclic Output 8 Mapping	0 (Disabled)
MM.028	Cyclic Output 9 Mapping	0 (Disabled)
MM.029	Cyclic Output 10 Mapping	0 (Disabled)
MM.030	Load Module Defaults	Off (0)
MM.031	Store Option Parameters	Off (0)
MM.032	Module Reset	Off (0)
MM.033	Restore Saved Option Parameters	Off (0)
MM.034	Data Compression Enable	Off (0)
MM.035	Serial Number LS	-
MM.049	Cyclic Data Mapping Status	0 (No errors)
MM.050	Module Error Status	-
MM.052	Background Cycles per Second	-
MM.053	PCB Temperature	-

Pr	Function	Deafult Value
MM.054	Hardware Version	-
MM.055	Serial Number MS	-
MM.056	Manufacture Date Code (YYMM)	-

14 Full parameter descriptions

This section describes the SI-Interbus option module parameters in detail.

The following table describes the coding used for the parameter tables in this section.

Table 14-1 Parameter type coding

Bin	Binary parameter	Displays a binary value
Bit	Bit parameter	1 bit parameter
BU	Bit default or unipolar	Bit parameters with this flag set to 1 are defaulted to 1 (On), non-bit parameters with this flag set to 1 are unipolar.
Date	Date parameter	Parameter value is displayed in date format (DD-MM-YY)
DE	Destination	Parameter can be used as a destination parameter
FI	Filtered	Parameter value display is filtered
IP	IP address	Parameter value is displayed in IP address format (www.xxx.yyy.zzz)
Mac	MAC address	Parameter value is displayed as a 48-bit (6 bytes) hexadecimal number
NC	Non-copyable	Parameter is not copied to or from the NV media card
ND	No default value	Parameter is not modified if default values are loaded
PS	Power-down save	Value is automatically saved in the EEPROM when the drive enters the under voltage state
PT	Protected	Parameter cannot be used as a destination
RA	Rating dependant	Value is dependent on the drive power rating, These parameters are not transferred from the NV media card if the destination and source drives are different
RO	Read-only	Parameter is read-only
RW	Read / Write	Parameter can be read and written to
SMP	Slot, Menu, Parameter	Parameter value is displayed using the slot/menu/ parameter format (s.mm.ppp)
Time	Time formatted	Parameter value is displayed in time format (HH:MM:SS)
Txt	Text string	Parameter value is displayed as text string
US	User save parameter	Parameter value is saved in EEPROM when a parameter save function is executed (Pr **MM.000** = Save parameters)
Ver	Version number	Parameter value is displayed in version format (ww.xx.yy.zz)

The SI-Interbus setup menu 0 parameters are mirrored in the setup menu 15, 16 or 17 for the option module depending on which slot the SI-Interbus is installed in.

14.1 Module ID

MM.001	SI-Interbus Module ID		
Minimum	0	Maximum	999
Default	None	Units	None
Type	16 Bit Volatile	Update Rate	Power-up write
Display format	None	Decimal Places	0
Coding	RO, ND, NC, PT, BU		

The SI-Interbus module displays the module ID code in Pr **MM.001**, this module ID code can be used to identify the module variant.

Pr MM.001	SI-Interbus variant
404	500 kBd
414	2 MBd

14.2 Firmware version

MM.002	SI-Interbus Firmware Version		
Minimum	0 (Display: 0.00.00.00)	Maximum	99999999 (Display: 99.99.99.99)
Default	0 (Display: 0.00.00.00)	Units	None
Type	32 Bit Volatile	Update Rate	Power-up write
Display format	Version	Decimal Places	0
Coding	RO, ND, NC, PT		

Pr **MM.002** displays the SI-Interbus firmware version in the form ww.xx.yy.zz.

14.3 Interbus data format

MM.005	SI-Interbus Data Format		
Minimum	0	Maximum	309
Default	4	Units	None
Type	16 Bit User Save	Update Rate	Background read
Display format	None	Decimal Places	0
Coding	RW		

The SI-Interbus data format is specified as ‘NNPP’, where ‘NN’ specifies the non-cyclic data mode, and ‘PP’ specifies the number of cyclic process data words as shown in the following table.

Pr MM.005	NN	PP	Non-cyclic Mode	Cyclic Words
1 to 10	0	1 to 10	None	1 to 10
100 to 109	1	0 to 9	CT Single Word	0 to 9
200 to 209	2	0 to 6	PPO 4 Word	0 to 6
300 to 309	3	0 to 9	PCP	0 to 9

NOTE The size of the data mapping will depend on the total size of the target / source parameters. Parameters of 16-bits or less will be cast as 16-bits if **MM.34** *Data Compression Enable* = On, but will be cast as 32-bits if **MM.34** *Data Compression Enable* = Off. Parameters larger than 16-bits will always be cast as 32-bits on the network.

14.4 Interbus operating status

MM.006	SI-Interbus Operating Status		
Minimum	-3	Maximum	9999
Default	None	Units	None
Type	16 Bit Volatile	Update Rate	Background update
Display format	None	Decimal Places	0
Coding	RO, ND, NC, PT		

If the operating status shows a negative number, this indicates that the SI-Interbus is not currently communicating with the Interbus master controller. Values above 0 indicate the number of messages per second being processed.

Pr MM.006	Description
> 0	Network healthy, displays the number of messages processed per second
0	Network health, no cyclic data transfer
-1	SI-Interbus has initialised correctly and waiting for the Interbus master to initialise communication
-2	The SI-Interbus module reports an internal hardware fault
-3	Configuration error, invalid setting in the SI-Interbus configuration parameters

If Pr **MM.006** shows a positive value, this value is dependent upon the Interbus network communication speed, number of mappings and whether non-cyclic communications are active or not.

14.5 Network loss timeout

MM.007	Network Loss Timeout		
Minimum	0	Maximum	3000
Default	200	Units	ms
Type	16 Bit User Save	Update Rate	Background read
Display format	None	Decimal Places	0
Coding	RW, BU		

The SI-Interbus resets an internal timer when a valid message is received from the Interbus network. The network loss trip is triggered when no new messages are received before the timer times out. The value is in units of milliseconds.

14.6 Direct data mapping

MM.009	Direct data mapping		
Minimum	0	Maximum	1
Default	1	Units	None
Type	1 Bit User Save	Update Rate	Background Read
Display format	None	Decimal Places	0
Coding	RW		

By default, parameters **MM.010** to **MM.029** are used as pointers to specify the destination parameter for OUT data received from the Interbus master controller, and the source parameter of IN data to be transmitted to the Interbus master controller.

When direct data mapping is enabled, Pr **MM.010** to Pr **MM.019** are used as the source parameters for IN data and Pr **MM.020** to Pr **MM.029** are used as the destination parameters for OUT data.

Hence, IN data values read from Pr **MM.010** to **MM.019** will be transmitted to the Interbus master controller and OUT data values arriving from the Interbus master controller will be written directly into Pr **MM.020** to Pr **MM.029**.

14.7 Cyclic input mapping

MM.010 to MM.019	Cyclic Input1 to Input10 Mapping		
Minimum	-32768	Maximum	32767
Default	Input1: 1040 Input2: 201	Units	None
Type	16 Bit User Save	Update Rate	Power-up read
Display format	None	Decimal Places	0
Coding	RW		

The reference for the source parameter is entered in the mapping parameter in the form MMPP, where MM represents the menu number of the source parameter and PP represents the parameter number of the source parameter. Leading zeros are not displayed.

14.8 Cyclic output mapping

MM.020 to MM.029	Cyclic Output1 to Output10 Mapping		
Minimum	-32768	Maximum	32767
Default	Output1: 642 Output2: 121	Units	None
Type	16 Bit User Save	Update Rate	Power-up read
Display format	None	Decimal Places	0
Coding	RW		

The reference for the destination parameter is entered in the mapping parameter in the form MMPP, where MM represents the menu number of the destination parameter and PP represents the parameter number of the destination parameter. Leading zeros are not displayed.

14.9 Default option parameters

MM.030	Default Option Parameters		
Minimum	0 (Display: Off)	Maximum	1 (Display: On)
Default	0 (Display: Off)	Units	None
Type	1 Bit Volatile	Update Rate	Read on reset
Display format	None	Decimal Places	0
Coding	RW, NC		

If set to “On” when the module is reset (**MM.032** = On), this parameter will cause the option module to return to its “Out of Box” configuration any settings stored on the module will be returned to their default values.

NOTE This action does not save the parameters in the drive, a drive save must be performed if the parameters are to be saved after loss of power.

To save the drive parameters:

- Set Pr **MM.000** to 1001
- Press the drive red reset button or set Pr **10.038** to 100

14.10 Save option parameters

MM.031	Save Option Parameters		
Minimum	0 (Display: Off)	Maximum	1 (Display: On)
Default	0 (Display: Off)	Units	None
Type	1 Bit Volatile	Update Rate	Background
Display format	None	Decimal Places	0
Coding	RW, NC		

The SI-Interbus module has the ability to save a copy of the setup parameters in FLASH memory, this allows the user, for example, to keep a copy of a working set of parameters in the module.

To store the SI-Interbus configuration parameters in the FLASH:

- Set Pr **MM.031** to On
- Set Pr **MM.000** to 1001
- Press the drive red reset button or set Pr **10.038** to 100

The Interbus communication will stop and the SI-Interbus configuration parameters will be saved within the SI-Interbus FLASH memory. The SI-Interbus will then reset and re-initialise using the configuration parameter values.

14.11 Module reset

MM.032	Module reset		
Minimum	0 (Display: Off)	Maximum	1 (Display: On)
Default	0 (Display: Off)	Units	None
Type	1 Bit Volatile	Update Rate	Background
Display format	None	Decimal Places	0
Coding	RW, NC		

When this parameter is set (On), the module performs a warm reset. When the reset has been completed and the module is performing its initialisation routines, this parameter will be cleared to zero (Off). The drive, and any other modules fitted to the drive will not be affected by the reset.

NOTE If the mapping configuration size has changed (Pr **MM.005** *Interbus Data Format*), then the module reset is insufficient to fully initialise the Interbus network and after saving parameters, the module must be power-cycled.

14.12 Use saved option parameters

MM.033	Use Saved Option Parameters		
Minimum	0 (Display: Off)	Maximum	1 (Display: On)
Default	0 (Display: Off)	Units	None
Type	1 Bit Volatile	Update Rate	Background
Display format	None	Decimal Places	0
Coding	RW, NC		

If valid configuration parameters have previously been stored in the SI-Interbus flash memory (see **MM.031**), these values can be restored into the host drive parameters by setting Pr **MM.033** to On.

When the configuration parameter values have been uploaded to the host drive SI-Interbus will reset and re-configure using the updated parameter values.

This feature allows a pre-configured SI-Interbus module to be installed into a host drive without losing the SI-Interbus configuration.

14.13 Data compression enable

MM.034	Data Compression Enable		
Minimum	0 (Display: Off)	Maximum	1 (Display: On)
Default	0 (Display: Off)	Units	None
Type	1 Bit User Save	Update Rate	Background
Display format	None	Decimal Places	0
Coding	RW		

By default, the SI-Interbus uses 32 bits for each data channel, even if the target parameter in the drive is a 16-bit parameter. This strategy (known as casting) ensures that the cyclic data transmitted over the Interbus network is kept aligned with memory locations in 32-bit PLCs. When cyclic data compression is enabled (Pr **MM.34** = On),

a data channel will only use 32 bits if the source/target drive parameter is a 32-bit parameter. If the source/target drive parameter is only 1, 8 or 16 bits wide 16 bits will be used for that particular data channel.

14.14 Serial number LS

MM.035	Serial Number LS		
Minimum	0	Maximum	99999999
Default	None	Units	None
Type	32 Bit Volatile	Update Rate	Power-up write
Display format	Lead Zero Pad	Decimal Places	0
Coding	RO, ND, NC, PT		

The SI-Interbus module serial number is a 10-digit decimal number loaded during manufacture and cannot be changed.

This parameter contains the last 8 digits of the serial number. (See also Pr **MM.055**).

14.15 Cyclic mapping status

MM.049	Cyclic Mapping Status		
Minimum	0	Maximum	255
Default	None	Units	None
Type	8 Bit Volatile	Update Rate	Background write
Display format	None	Decimal Places	0
Coding	RO, ND, NC, PT, BU		

If the SI-Interbus operating status parameter (Pr **MM.006**) indicates -3, a mapping configuration error has been detected. The reason for the error is indicated by the SI-Interbus mapping status parameter, Pr **MM.049**. When a mapping error has been corrected, reset the SI-Interbus by setting Pr **MM.032** to On.

NOTE If the mapping configuration size has changed (Pr **MM.005** *Interbus Data Format*), then the module reset is insufficient to fully initialise the Interbus network and after saving parameters, the module must be power-cycled.

The full list of mapping error codes can be found in the Diagnostics section (see **Table 12-2 *Mapping status codes***).

14.16 Module status

MM.050	Module Status		
Minimum	0	Maximum	255
Default	None	Units	None
Type	8 Bit Volatile	Update Rate	Background write
Display format	None	Decimal Places	0
Coding	RO, ND, NC, PT, BU		

If SI-Interbus detects an error during operation, it will force a trip in the drive, and write the SI-Interbus error code into this parameter.

The full list of module status codes can be found in the Diagnostics section (see **Table 12-3 *Module error codes***).

14.17 Background cycles

MM.052	Background Cycles		
Minimum	0	Maximum	65535
Default	None	Units	Cycles per Second
Type	16 Bit Volatile	Update Rate	Background update
Display format	None	Decimal Places	0
Coding	RO, ND, NC		

This parameter displays the number of background cycles processed each second.

14.18 PCB temperature

MM.053	PCB Temperature		
Minimum	-127	Maximum	127
Default	None	Units	°C
Type	8 Bit Volatile	Update Rate	Background update
Display format	None	Decimal Places	0
Coding	RO, ND, NC		

This parameter displays the temperature of the module in °C.

14.19 Hardware version

MM.054	Hardware Version		
Minimum	0.00	Maximum	655.35
Default	None	Units	None
Type	16 Bit Volatile	Update Rate	Power-up write
Display format	None	Decimal Places	2
Coding	RO, ND, NC, PT, BU		

This parameter displays the module hardware revision number.

14.20 Serial number MS

MM.055	Serial Number MS		
Minimum	0	Maximum	99
Default	None	Units	None
Type	32 Bit Volatile	Update Rate	Power-up write
Display format	None	Decimal Places	0
Coding	RO, ND, NC, PT		

The SI-Interbus module serial number is a 10-digit decimal number loaded during manufacture and cannot be changed.

This parameter contains the first 2 digits of the serial number. (See also Pr **MM.035**).

14.21 Manufacture date code

MM.056	Manufacture Date Code (YYMM)		
Minimum	0	Maximum	9999
Default	None	Units	None
Type	16 Bit Volatile	Update Rate	Power-up write
Display format	Lead Zero Pad	Decimal Places	0
Coding	RO, ND, NC, PT, BU		

This parameter contains the date code of manufacture and is loaded into the module during manufacture and cannot be changed.

The date code is a four-digit number in the form YYMM where YY is the year and MM is the month of manufacture.

For example, a date code of 1910 would indicate a manufactured date of October 2019.

NOTE This format differs from the date code as printed on the module and packing carton labels which are in the form YYWW, where YY is the year and WW is the week number of manufacture.

15 CMD tool support files

15.1 Interbus CMD tool

The CMD tool is a Windows© (not later than Windows XP) based software package developed by Phoenix Contact and used to configure and diagnose the Generation 4 Interbus master controllers. An external database file, drive icon image files and a text file (README_CT.TXT) with instructions on how to install the drive support files to the appropriate directories, and import them into the CMD configuration tool, are available from Control Techniques for use with the CMD tool application. These files are provided in a compressed file (CT_IBS.ZIP) available from your local Control Techniques Drive Centre.

NOTE The Interbus CMD tool support files are not essential when configuring an Interbus network, each node can be entered manually, or the master controller can scan the network to determine which nodes are connected.

15.2 CMD tool configuration formats

The data formats supported by the SI-Interbus are listed in **Table 15-1**.

Table 15-1 SI-Interbus data formats

Format (Pr MM.005)	Non-cyclic Data Mode	Cyclic Words	Interbus ID	Process Data Channel Width
1	0	1	0x03 (3)	16 bits
2	0	2	0x03 (3)	32 bits
3	0	3	0x03 (3)	48 bits
4	0	4	0x03 (3)	64 bits
5	0	5	0x03 (3)	80 bits
6	0	6	0x03 (3)	96 bits
7	0	7	0x03 (3)	112 bits
8	0	8	0x03 (3)	128 bits
9	0	9	0x03 (3)	144 bits
10	0	10	0x03 (3)	160 bits
100	1	0	0x03 (3)	16 bits
101	1	1	0x03 (3)	32 bits
102	1	2	0x03 (3)	48 bits
103	1	3	0x03 (3)	64 bits
104	1	4	0x03 (3)	80 bits
105	1	5	0x03 (3)	96 bits
106	1	6	0x03 (3)	112 bits
107	1	7	0x03 (3)	128 bits
108	1	8	0x03 (3)	144 bits
109	1	9	0x03 (3)	160 bits
200	2	0	0x03 (3)	64 bits
201	2	1	0x03 (3)	80 bits

Format (Pr MM.005)	Non-cyclic Data Mode	Cyclic Words	Interbus ID	Process Data Channel Width
202	2	2	0x03 (3)	96 bits
203	2	3	0x03 (3)	112 bits
204	2	4	0x03 (3)	128 bits
205	2	5	0x03 (3)	144 bits
206	2	6	0x03 (3)	160 bits
300	3	0	0xF3 (243)	0 bits
301	3	1	0xF3 (243)	16 bits
302	3	2	0xF3 (243)	32 bits
303	3	3	0xF3 (243)	48 bits
304	3	4	0xF3 (243)	64 bits
305	3	5	0xF3 (243)	80 bits
306	3	6	0xF3 (243)	96 bits
307	3	7	0xF3 (243)	112 bits
308	3	8	0xF3 (243)	128 bits
309	3	9	0xF3 (243)	144 bits

16 Glossary of terms

Address: This is the unique network identification given to a networked device to allow communication on a network. When a device sends or receives data the address is used to determine the source and the destination of the message.

Bit: A binary digit, this may have the value of 1 or 0.

Block mapping: A method of mapping a range of consecutive parameters using only two ascending parameters. This means that by using two mapping parameters, up to 10 consecutive mappings may be made.

Byte: A collection of 8 binary digits that collectively store a value. This may be signed or unsigned.

Compression: By default SI-INTERBUS transmits values as 32-bits on the network. It is possible by using compression to reduce the number of bits transmitted when sending 16-bit (or smaller) values on the network to 16-bit (32-bit values will still be transmitted as 32-bit values). This has the advantage of reducing the volume of traffic on the network and allowing more parameters to be mapped within SI-INTERBUS.

Control word: A collection of binary digits that are used to control the drive. Features typically include directional controls, run controls and other similar functions.

Cyclic data: This consists of values that are sent at regular or cyclic intervals across the network. A typical use of cyclic data would be the transmission of a speed reference or a control word.

Data format: Determines the quantity and function of the data sent and received across the network.

Data rate: Determines the communication speed of the network, the higher the value the more data can be sent across the network in the same time period.

Device: A piece of equipment connected to a network, this may be any type of equipment including repeaters, hubs, masters or slaves.

Direct data mapping: Data is sent directly to the mapping parameters in the drive rather than the parameters redirecting the data to another parameter.

INTERBUS CMD tool: The CMD tool is the software package used to configure and diagnose the INTERBUS master controllers.

Mapping: The process of linking INTERBUS values to parameters within the drive.

Master: The controlling device on the network, generally this will include programming features.

Mode 1 - CT single word mode: A method of sending non-cyclic data using a single word on a cyclic channel.

Mode 2 - PPO4 word mode: A method of sending 4 non-cyclic data words using cyclic channels.

Network loss trip: A method to determine when a node has lost communication with the master.

Module ID code: Indicates the type of solutions module that is fitted in the corresponding slot.

Node: A device on the network. This may be either a device such as a drive or part of the network such as a repeater.

Non-cyclic data: Data that is requested or sent by the master as required. This is not sent on a regular basis and generally allows access to any parameter. This is useful for occasional changes or configuration purposes.

Response ID: The response code of the message received when using PPO4 word non-cyclic communication.

Slave: A device on the INTERBUS network such as a drive or sensor. A slave device will only respond to messages from a master.

Status word: A value that denotes the status of the drive. Each bit within the word will have a specific meaning.

Telegram: A message used within mode 1 non-cyclic data communication. This term is sometimes used to represent a generic message on the network.

Termination: This is used at both ends of a network segment to prevent reflections and reduce noise.

Watchdog: A method used to determine if a communication system is healthy. A typical watchdog scheme uses a handshaking system to check both the master and slave are participating in communications.

Index

Numerics

16-bit parameter access 35, 45
32-bit parameter 35

A

Abort CT Single Word 45
Abort CT Single Word non-cyclic message 45
Accessing drive parameters using the PCP objects 55
Adjusting parameters 9

B

Background Cycles 81
Background Cycles Per Second 68
Bus IN 17
Bus OUT 17

C

Communication Reference 54
Contents 4
Control word 62
Control word bit definitions 63
Control word bit functions 62
CT Single Word 32, 34, 59
CT Single Word format 35
CT Single Word read sequence 36
CT Single Word write sequence 41
Cyclic Input Mapping 77
Cyclic Mapping Status 66, 80
Cyclic Output Mapping 77

D

Data Compression 79
Date code format 11
Default Option Parameters 78
Diagnostics 65
Direct Data Mapping 77

E

Electrical installation 17
Event trigger 58

F

Firmware version 65, 75
Full parameter descriptions 74

G

General installation 13
Getting started 20

H

Hardware Version 69, 81

I
Input 11
Interbus cable 19
Interbus CMD tool 83
Interbus ID 83
Interbus network termination 19
Interbus Operating Status 65
Introduction 10

L
LED operating sequence 71

M
Manufacture Date Code 69, 82
Maximum cable length 19
Maximum network length 19
Mechanical installation 13
Mode 1 - CT Single Word mode 32
Mode 2 - PPO 4 Word mode 46
Mode 3 - Peripheral Communications Protocol V2.0 54
Module error codes 68
Module error status 68
Module ID 75
Module ID code 20, 65
Module Reset 79
Module Status 80

N
Network Loss Timeout 76
Non-cyclic data 32
Non-cyclic modes 32

O
Output 11

P
Parameter 0 access 58
Parameter reference 11
Parameter type coding 74
Parameters, adjusting 9
PCB Temperature 69, 81
PCP object 55
    specification 54
PCP READ object 55
PCP service error codes 57
PCP supported services 55
PCP WRITE object 56
Peripheral Communications Protocol V2.0 32
PLC registers 60
PPO 4 Word 32, 47, 59
PPO 4 Word IN data structure 48
PPO 4 Word OUT data structure 47
PPO 4 Word read sequence 50
PPO 4 Word write sequence 52

R
Reading parameters using CT Single Word 35
Remote bus IN 18
Remote bus OUT 18
Reset all option modules 30
Response ID codes 49
Restore Saved Option Parameters 30

S
SAFE TORQUE OFF 62
Safe Torque Off 8
Safety information 7
Safety of personnel 8
Save Option Parameters 78
Saving drive parameters 31
Serial Number 80, 81
Setup menu 72
Setup parameter descriptions 72
SI-Applications parameters 60
SI-Interbus 65
SI-Interbus connections 17
SI-Interbus Firmware Version 65
SI-Interbus Module ID 30, 65
SI-Interbus Serial Number LS 66
SI-Interbus Serial Number MS 66
SI-Interbus setup using non-cyclic data 57
Status LEDs 70
Status word 64
Status word bit definitions 64
Supported features 12

U
Use Saved Option Parameters 79

V
Virtual menu 60 (setup menu) 58
Virtual menus 58

W
What is cyclic data 20
Writing parameters using CT Single Word 40
Writing parameters using PPO 4 Word mode 52

0478-0614-01