RENOWNED KNOW-HOW
Automation Technology

RK ROSE+KRIEGER
A Phoenix Mecano Company

The new performance class...

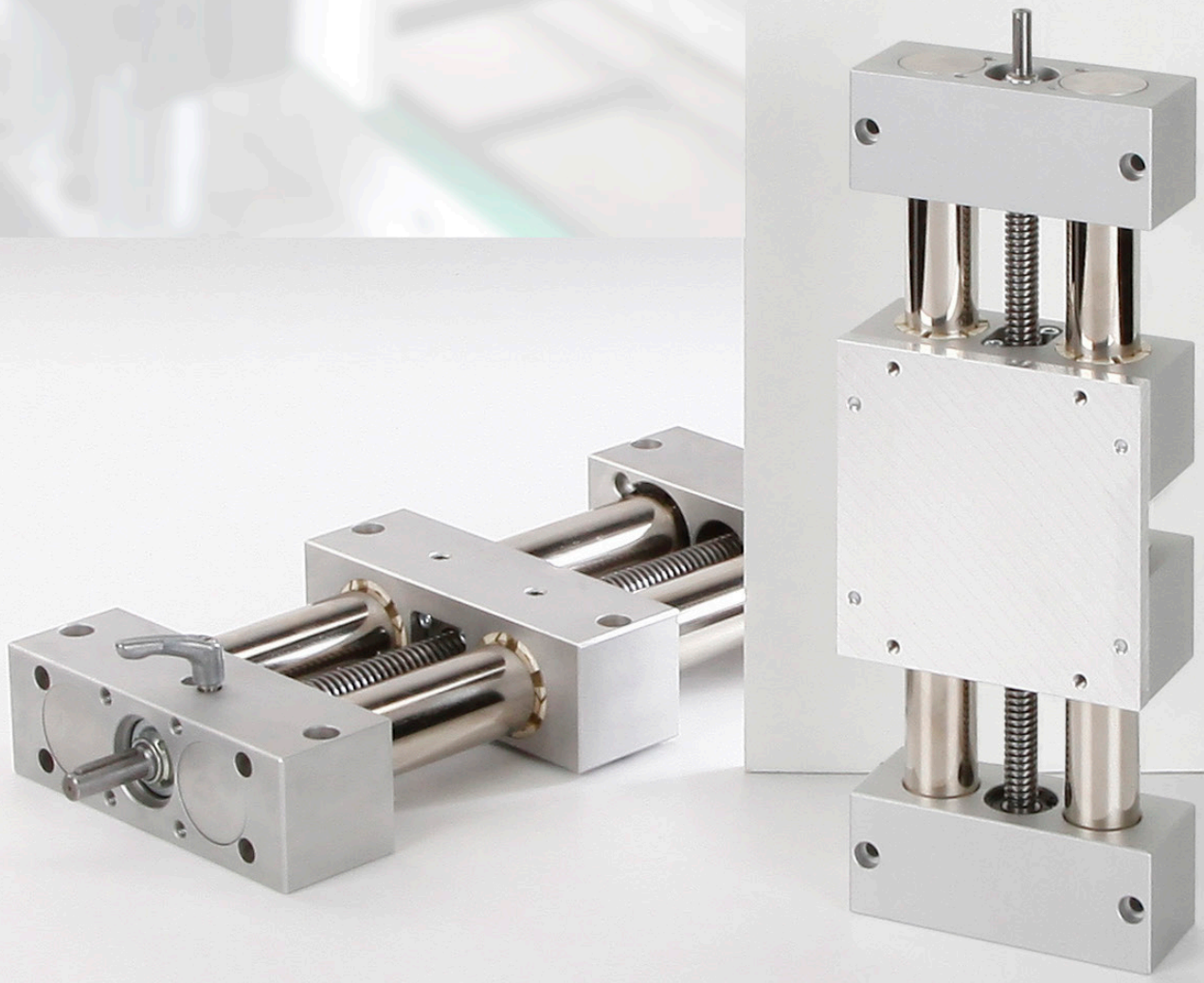

EP(X)-II 30/40

10/2017

EP(X)-II 30/40 twin tube actuator

The latest generation of twin tube units

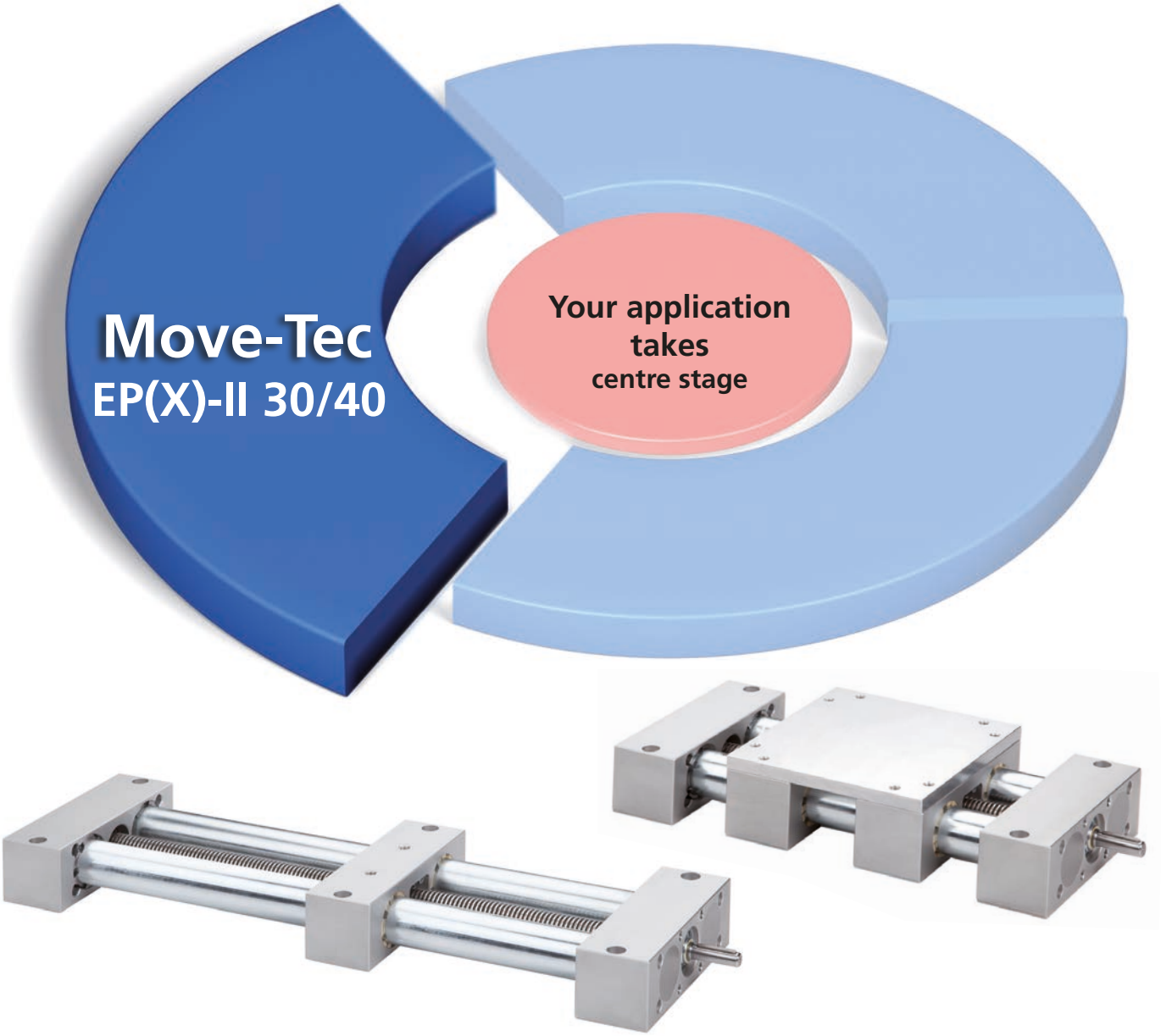

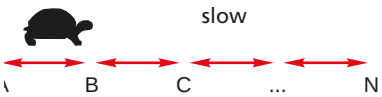

Features:

- Manual or electric drive
- Occasional to multiple adjustments daily
- Low duty cycle
- Low speed
- Medium to high stability
- Width, length and height adjustment

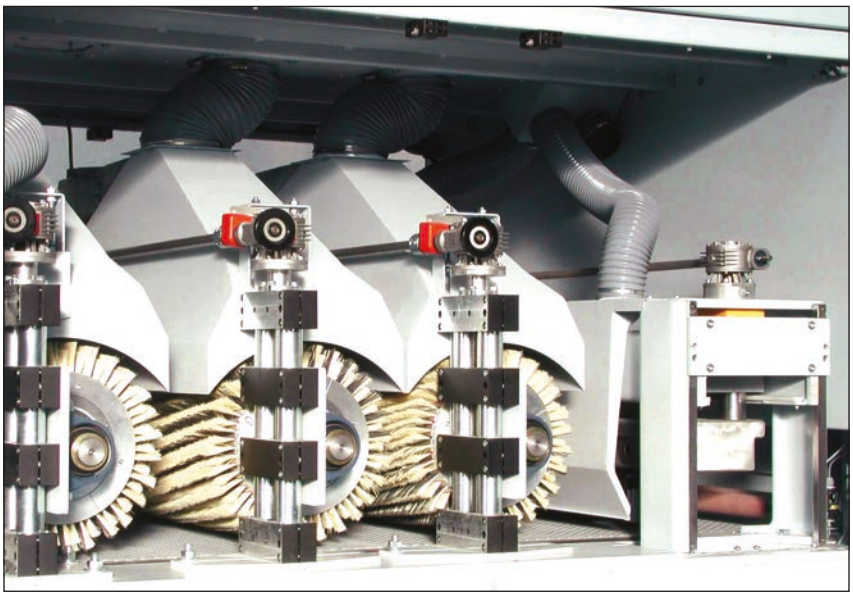

EP(X)-II 30/40 tubular linear unit – Table of contents

Properties/performance data

- General information / operating conditions 5
- Load data 5
- Geometric moments of inertia 5

Versions
(Dimensions, order numbers)

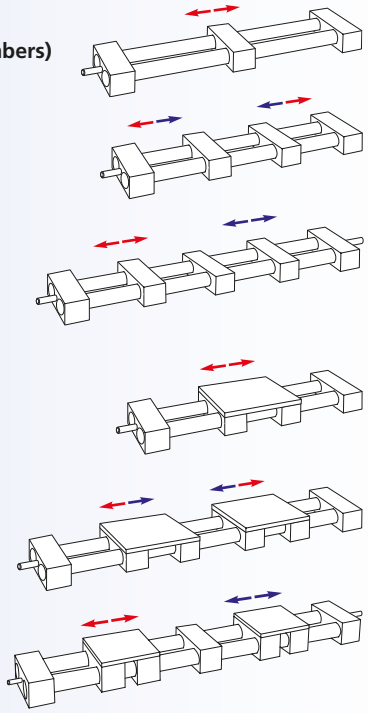

- EP-II 30/40 right or lefthand thread ..... 6 - 7
- EP-II 30/40 right and lefthand thread ..... 8 - 9
- EP-II 30/40 split screw ..... 10 - 11
- EPX-II 30/40 right or lefthand thread ..... 12 - 13
- EPX-II 30/40 right and lefthand thread ..... 14 - 15
- EPX-II 30/40 split screw ..... 16 - 17

Accessories

Drive

- Handwheel 18
- Chain wheel 18
- Timing-belt pulley 18
- Bevel gear set 19
- Angle drive 19
- Motor adapter / coupling ..... 20 - 21

Position determination

- Positioning indicator 22
- Limit switch 23

EP(X)-II 30/40 tubular linear unit

The latest generation of EP(X)-II 40 twin tube units – compensates for high bending moments during hand and motor-driven adjustments

Precise / plane mounting surface

✓ Distortion-free installation

Integrated spindle clamping

✓ Manual force locking spindle clamping optional

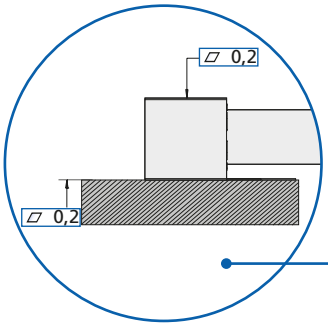

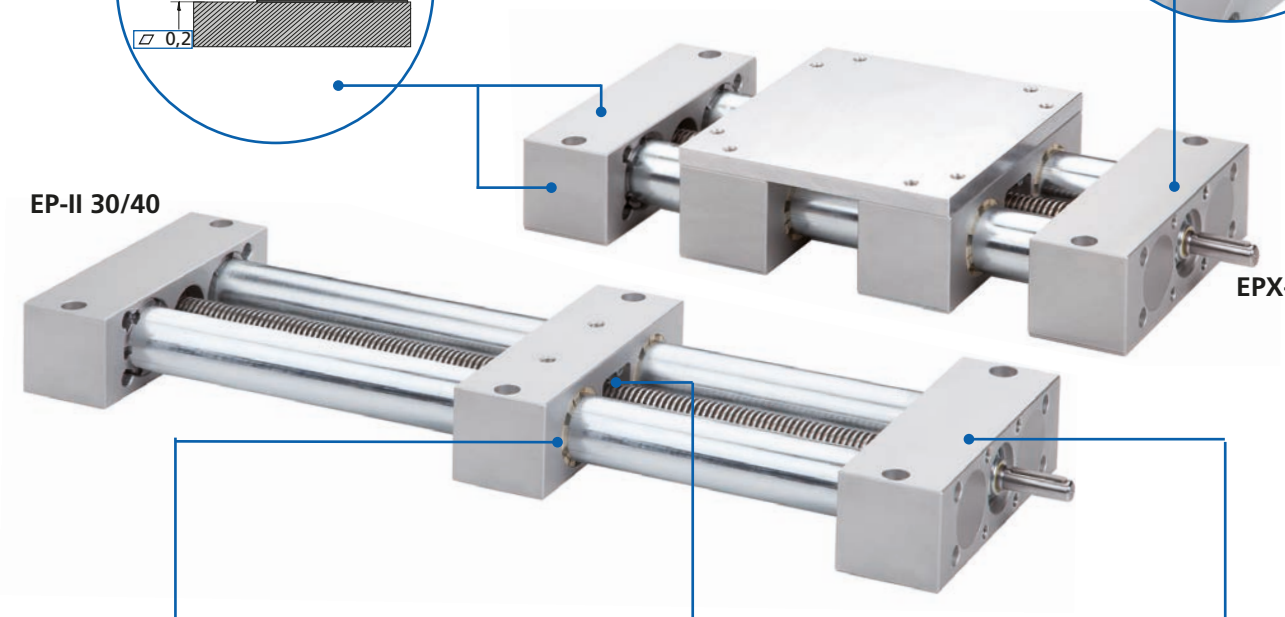

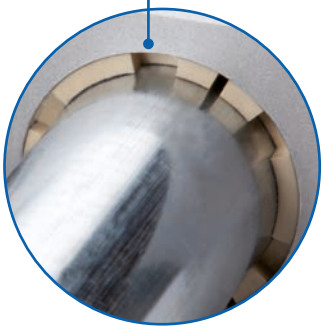

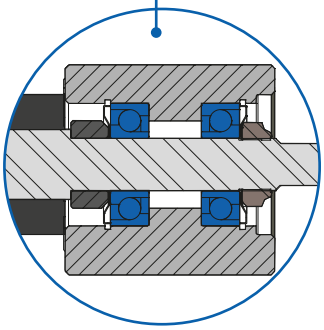

Carriage with slide bushings as standard

✓ Longer lifetime due sleeves made of high performance material

New guide nut concept

✓ Split nuts, simple replacement – no need to dismantle the linear unit

✓ Longer lifetime due to high performance materials

Reduced axial play

✓ Optimised lead screw with fixed bearing in end element

Features:

- High moment capacity
- Version available with large fixing plate
- Identical connection sizes as previous version

Versions – size 30/40

- EP-II 30/40
  Right or lefthand thread
  Right and lefthand thread
  Split Screw
- EPX-II 30/40
  Right or lefthand thread
  Right and lefthand thread
  Split Screw

Options:

- Corrosion-protected units
- Second free moving
- Protect: with bellows and protection class IP 40
- Spindle clamping only at ball-screw spindle units

EP(X)-II 30/40 Technical data

RK ROSE+KRIEGER

General information / operating conditions

	EP-II 30	EPX-II 30	EP-II 40	EPX-II 40
Guide	Slide guide			
Installation position	Any position			
Max. speed	0.015 m/s (stroke independent)		0.02 m/s (stroke independent)	
Max. acceleration	3 m/s²			
Repeatability	± 0,1 mm			
Max. no-load torque	0,6 Nm	0,7 Nm	0,7 Nm	0,8 Nm
Drive	Trapezoidal screw, Ø 14, pitch 3		Trapezoidal screw, Ø 20, pitch 4	
Lead accuracy	(± 0,1 / 300 mm)			
Duty cycle	S3, 30%, base 1h			
Ambient temperature	0 to +60°C			
Protection class	Basic: no / Protect: IP 40			

Static load data*

F Force [N]

M Moment [Nm]

I Geometric moment of inertia [cm^4]

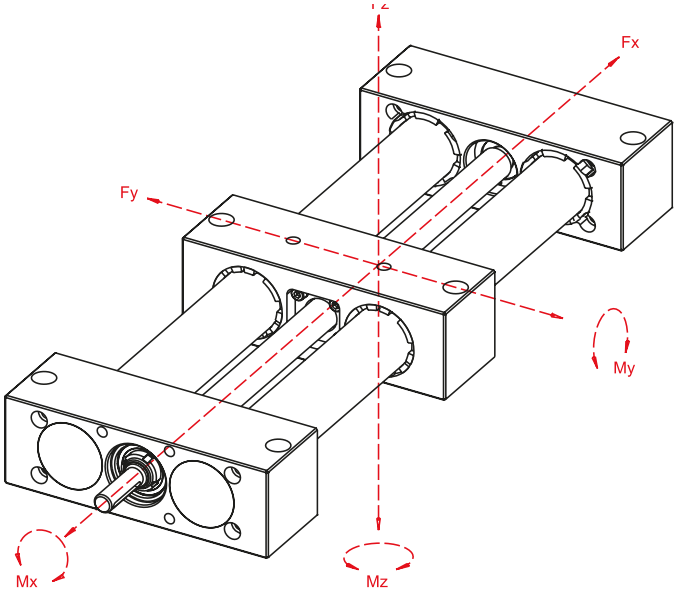

* with reference to carriage (deflection of guide element f = 0.5 mm, static, end elements supported)

Type	Fx	Fy			Fz			Mx	My	Mz
Total length [mm]	500	500	1000	1500	500	1000	1500			
EP-II 30	800	1000	800	500	550	300	100	60	60	75
EPX-II 30	800	1400	1200	700	650	450	200	80	110	140
EP-II 40	1000	3500	2600	1300	2000	580	120	120	130	150
EPX-II 40	1000	6000	3100	1800	2200	680	220	160	190	240

Geometric moment of inertia

[cm^4]

Type	Iy	Iz
EP(X)-II 30	3.47	46.57
EP(X)-II 40	14.84	198.06

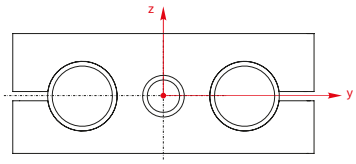

EP-II 30/40 – Dimensions / ordering data

Order information:

- Corrosion-protected units available on request
- Second non driven carriage available on request
- Scale upon request
- Protect: version with bellows optional (IP 40)

Version ■ **Right *or* lefthand thread**

Code No.	Type	Spindle	Basic length	B	C	D1	D2	D3	F	G1	G2	H	J	L1	L2	M1	M2	M3
79_301 _ _ 1 _ A_ _ _ _	30	Tr 14x3	150	130	54	8	–	30 H8	2	M6 / 12 deep	M6 / 9 deep	27	50	26	–	40x30	114.5	70
79_303 _ _ 1 _ A_ _ _ _							8								26			
79_401 _ _ 1 _ A_ _ _ _	40	Tr 20x4	180	180	63	12	–	40 H8	3	M8 / 20 deep	M8 / 8 deep	31.5	60	38	–	46	160	90
79_403 _ _ 1 _ A_ _ _ _							12								38			

_ _ _ _ Total length = basic length + travel [mm] **(minimum travel 50 mm)**

A = standard
B = c/w angle drive on shaft end L1 (see page 19) (Only with spindle bearing ball bearing)

A = standard
B = c/w integrated spindle clamping (Only with spindle bearing ball bearing)

Spindle bearing:
1 = ball bearing
0 = slide bearing

Spindle version:
1 = righthand thread
2 = lefthand thread

Total length = basic length + travel

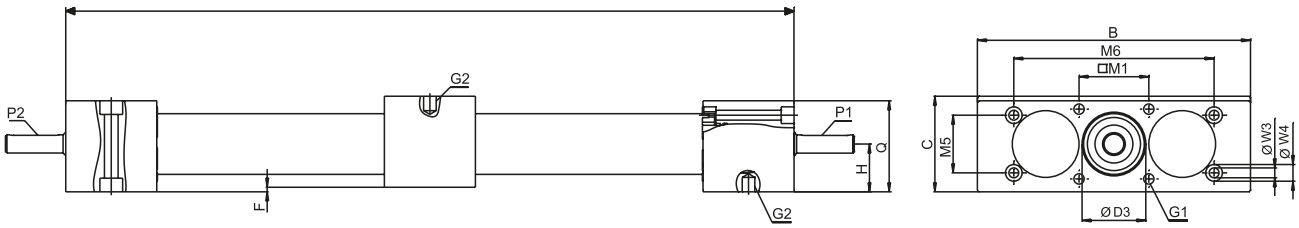

Total length – R

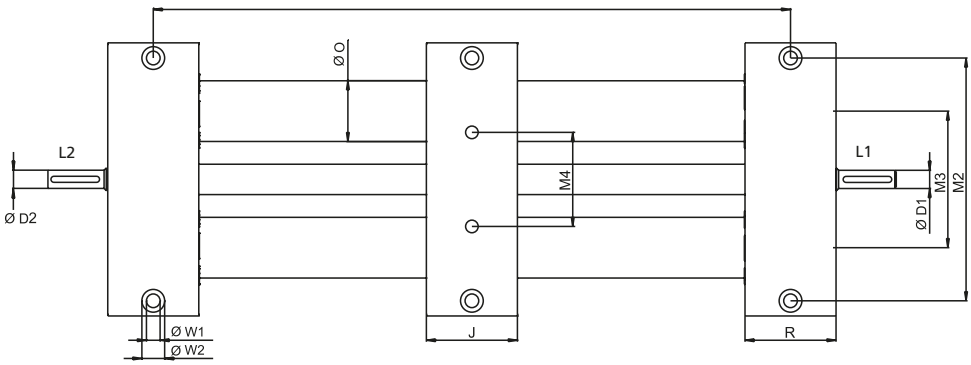

[mm]

M4	M5	M6	O	P1	P2	Q	R	W1	W2	W3	W4	Max. travel	Mass [kg]	
													Basic length	per 100 mm travel
42	35	92	30	2x2x20	–	52	50	6.5	10 / 26.5 deep	–	–	1424	2.6	0.4
					2x2x20							1398		
62	38	132	40	4x4x32	–	60	60	9	15 / 9 deep	6.5	11 / 8.5 deep	2820	5.53	0.96
					4x4x32									

EP-II 30/40 – Dimensions / ordering data

Order information:

- Please specify basic length and total travel when placing an order
- Corrosion-protected units available on request
- Second non driven carriage available on request
- Scale upon request
- Protect: version with bellows optional (IP 40)

Version ■ **Right *and* lefthand thread**

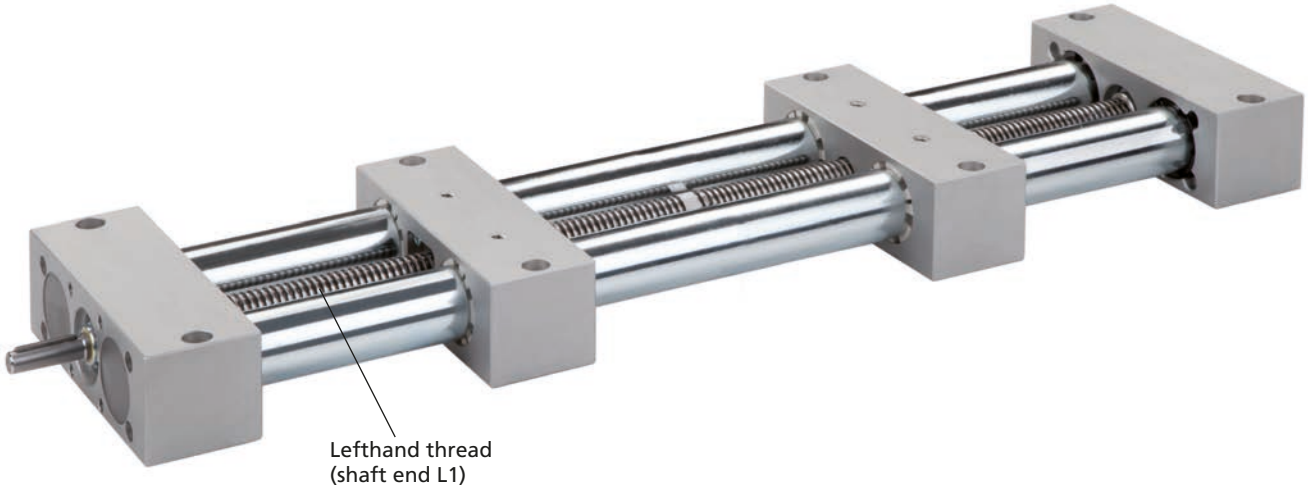

Code No.	Type	Spindle	Basic length	B	C	D1	D2	D3	F	G1	G2	H	J	L1	L2	M1	M2	M3
793301 _ _ 1 _ A_ _ _ _	30	Tr 14x3	200	130	54	8	–	30 H8	2	M6 / 12 deep	M6 / 9 deep	27	50	26	–	40x30	114.5	70
793303 _ _ 1 _ A_ _ _ _							8								26			
793401 _ _ 1 _ A_ _ _ _	40	Tr 20x4	240	180	63	12	–	40 H8	3	M8 / 20 deep	M8 / 8 deep	31.5	60	38	–	46	160	90
793403 _ _ 1 _ A_ _ _ _							12								38			

_ _ _ _ Total length = basic length + total travel [mm] **(minimum total travel 100 mm)**

A = standard
B = c/w angle drive on shaft end L1 (see page 19) (Only with spindle bearing ball bearing)

A = standard
B = c/w integrated spindle clamping (Only with spindle bearing ball bearing)

Spindle bearing:
1 = ball bearing
0 = slide bearing

Total length = basic length + travel

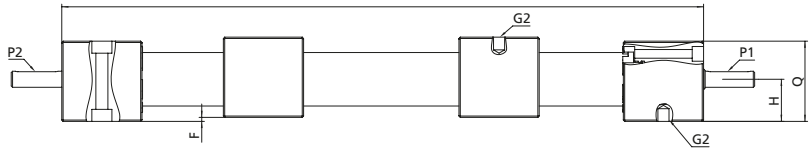

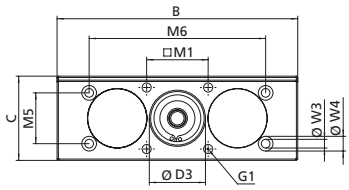

Total length – R

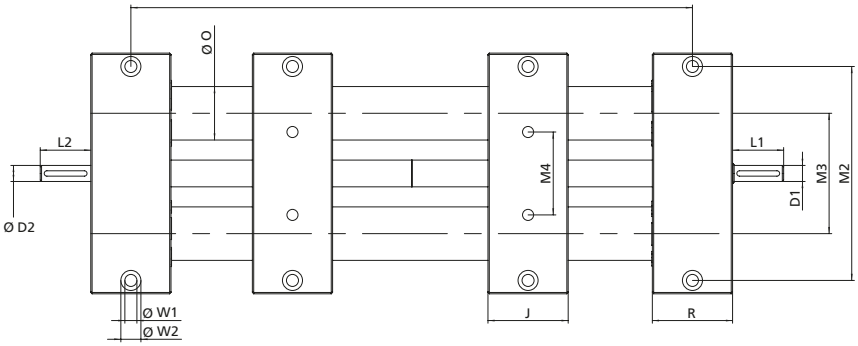

[mm]

M4	M5	M6	O	P1	P2	Q	R	W1	W2	W3	W4	Max. travel	Mass [kg]	
													Basic length	per 100 mm travel
42	35	92	30	2x2x20	– 2x2x20	52	50	6.5	10 / 26.5 deep	–	–	1800	3.43	0.4
62	38	132	40	4x4x32	– 4x4x32	60	60	9	15 / 9 deep	6.5	11 / 8.5 deep	2760	7.73	0.96

EP-II 30/40 – Dimensions / ordering data

Order information:

- Please specify basic length and total travel when placing an order
- Corrosion-protected units available on request
- Second non driven carriage available on request
- Scale upon request
- Protect: version with bellows optional (IP 40)

Version ■ **Split screw**

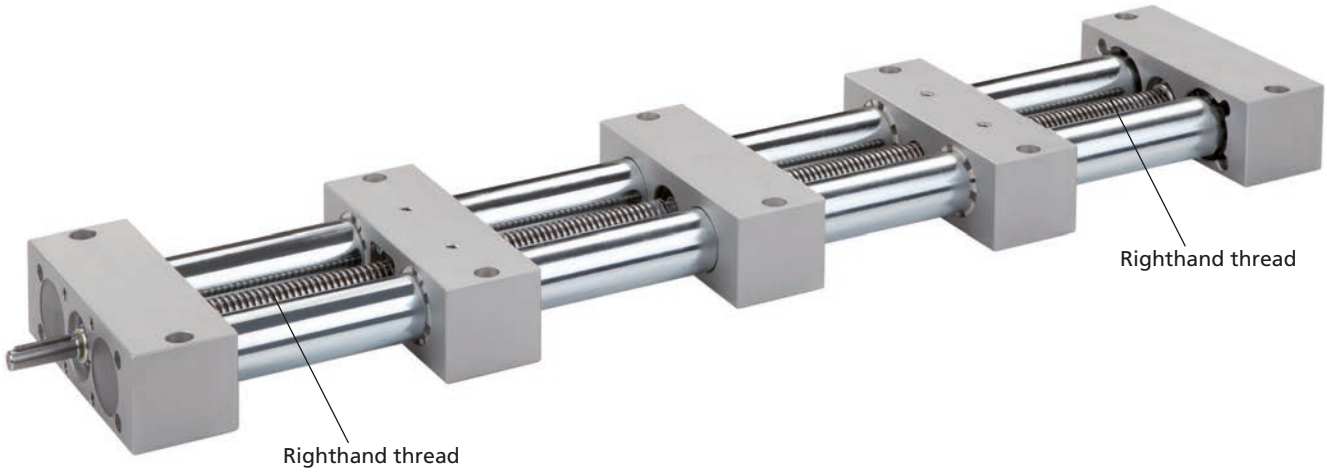

Code No.	Type	Spindle	Basic length	B	C	D1	D2	D3	F	G1	G2	H	J	L1	L2	M1	M2	M3
7943031 _ 1 _ A_ _ _ _	30	Tr 14x3	250	130	54	8	8	30 ^{H8}	2	M6 / 12 deep	M6 / 9 deep	27	50	26	26	40x30	114.5	70
7944031 _ 1 _ A_ _ _ _	40	Tr 20x4	300	180	63	12	12	40 ^{H8}	3	M8 / 20 deep	M8 / 8 deep	31.5	60	38	38	46	160	90

_ _ _ _ Total length = basic length + total travel [mm] **(minimum total travel 100 mm)**

A = standard
B = c/w angle drive on shaft end L1 (see page 19)

A = standard
B = c/w integrated spindle clamping

Total length = basic length + travel

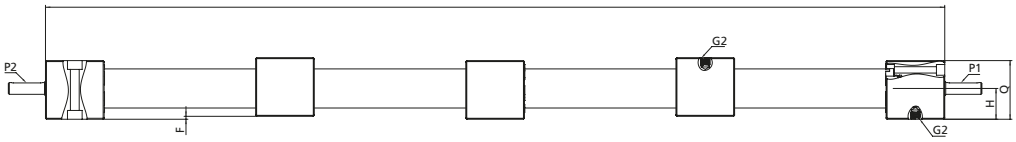

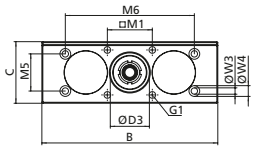

Total length – R

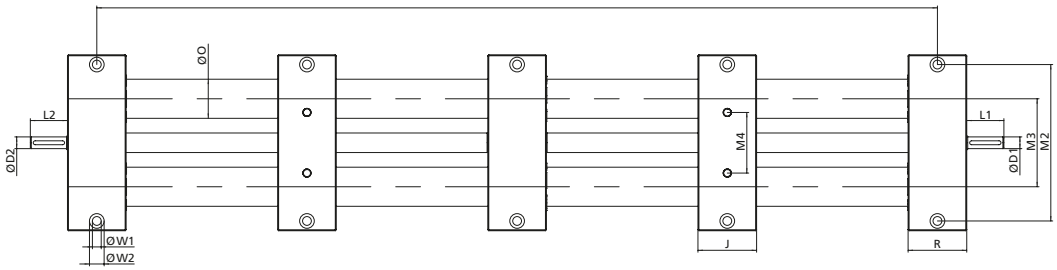

[mm]

M4	M5	M6	O	P1	P2	Q	R	W1	W2	W3	W4	Max. travel	Mass [kg]	
													Basic length	per 100 mm travel
42	35	92	30	2x2x20	2x2x20	52	50	6.5	10 / 26,5 deep	–	–	1375	4.2	0.4
62	38	132	40	4x4x32	4x4x32	60	60	9	15 / 9 deep	6.5	11 / 8,5 deep	2700	9.32	0.96

EPX-II 30/40 – Dimensions / ordering data

Order information:

- Corrosion-protected units available on request
- Second non driven carriage available on request
- Scale upon request
- Protect: version with bellows optional (IP 40)

Version ■ **Right *or* lefthand thread**

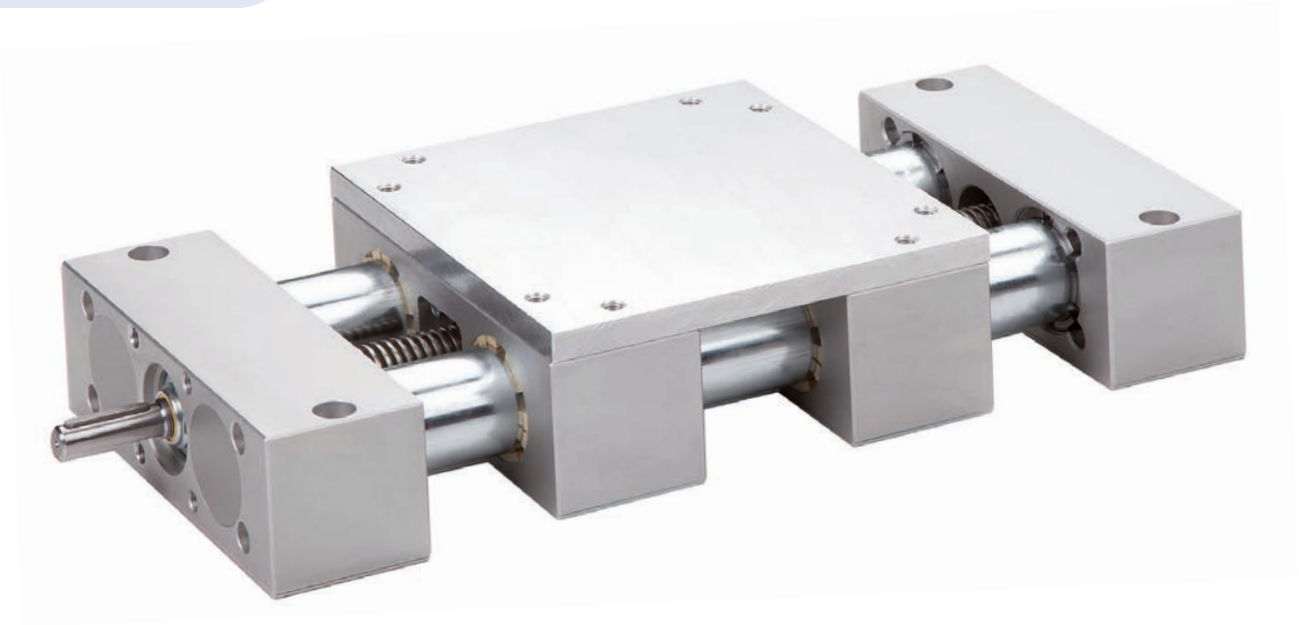

Code No.	Type	Spindle	Basic length	B	C	D1	D2	D3	F	G1	G2	G3	H	H2	J	L1	L2	M1	M2
79_301 _ _ 1 _ A_ _ _ _	30	Tr 14x3	230	130	64	8	–	30 H8	2	M6 / 12 deep	M6	M6 / 9 deep	27	10	130	26	–	40x30	114.5
79_303 _ _ 1 _ A_ _ _ _							8										26		
79_401 _ _ 1 _ A_ _ _ _	40	Tr 20x4	300	180	75	12	–	40 H8	3	M8 / 20 deep	M8	M8 / 8 deep	31.5	12	180	38	–	46	160
79_403 _ _ 1 _ A_ _ _ _							12										38		

_ _ _ _ Total length = basic length + travel [mm]

A = standard
B = c/w angle drive on shaft end L1 (see page 19) (Only with spindle bearing ball bearing)

A = standard
B = c/w integrated spindle clamping (Only with spindle bearing ball bearing)

Spindle bearing:
1 = ball bearing
0 = slide bearing

Spindle version:
5 = righthand thread
6 = lefthand thread

Total length = basic length + travel

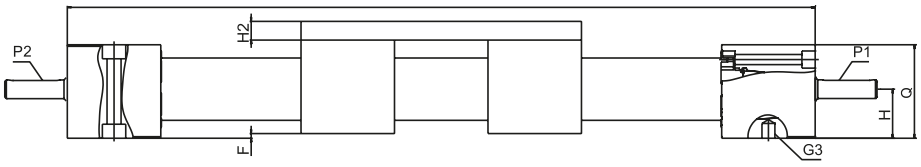

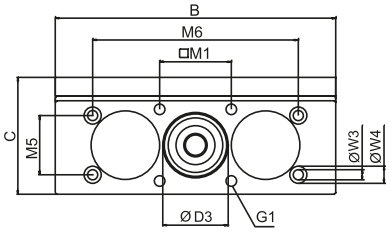

Total length – R

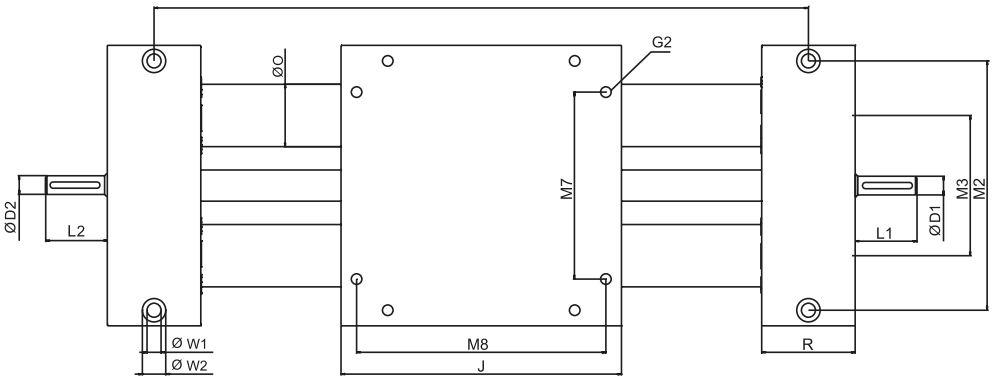

[mm]

M3	M5	M6	M7	M8	O	P 1	P 2	Q	R	W1	W2	W3	W4	Max. travel	Mass [kg] Basic length	Mass [kg] per 100 mm travel
70	35	92	80	114	30	2x2x20	–	52	50	6.5	10 / 26.5 deep	–	–	1344	4.1	0.4
							2x2x20							1318		
90	38	132	120	160	40	4x4x32	–	60	60	9	15 / 9 deep	6.5	11 / 8.5 deep	2700	8.95	0.96
							4x4x32									

EPX-II 30/40 – Dimensions / ordering data

Order information:

- Please specify basic length and total travel when placing an order
- Corrosion-protected units available on request
- Second non driven carriage available on request
- Scale upon request
- Protect: version with bellows optional (IP 40)

Version ■ **Right *and* lefthand thread**

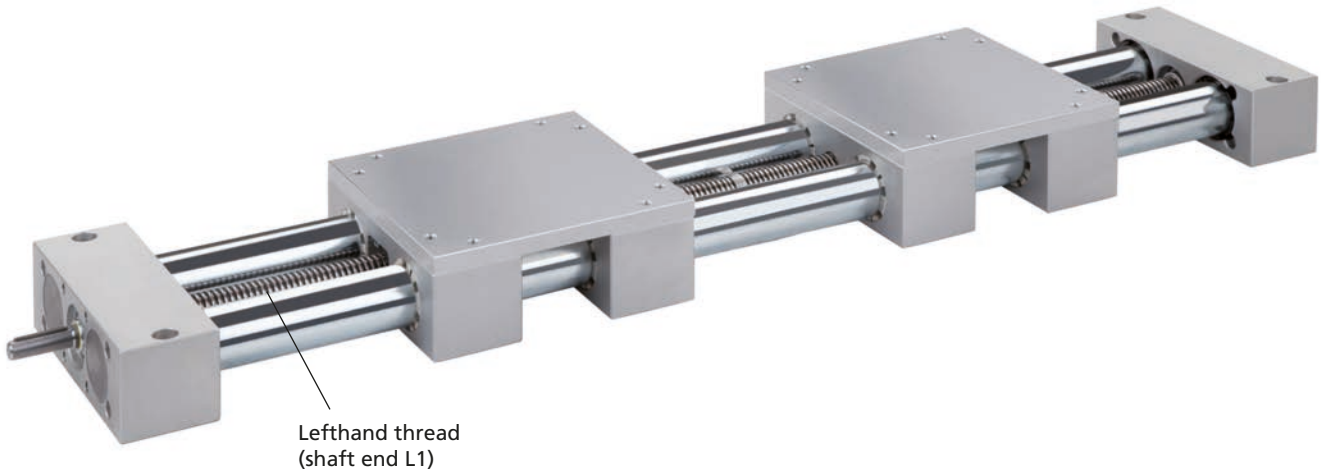

Code No.	Type	Spindle	Basic length	B	C	D1	D2	D3	F	G1	G2	G3	H	H2	J	L1	L2	M1	M2
797301 _ _ 1 _ A_ _ _ _	30	Tr 14x3	360	130	64	8	–	30 ^{H8}	2	M6 / 12 deep	M6	M6 / 9 deep	27	10	130	26	–	40x30	114.5
797303 _ _ 1 _ A_ _ _ _							8										26		
797401 _ _ 1 _ A_ _ _ _	40	Tr 20x4	480	180	75	12	–	40 ^{H8}	3	M8 / 20 deep	M8	M8 / 8 deep	31.5	12	180	38	–	46	160
797403 _ _ 1 _ A_ _ _ _							12										38		

_ _ _ _ Total length = basic length + travel [mm]

A = standard
B = c/w angle drive on shaft end L1 (see page 19) (Only with spindle bearing ball bearing)

A = standard
B = c/w integrated spindle clamping (Only with spindle bearing ball bearing)

Spindle bearing:
1 = ball bearing
0 = slide bearing

Total length = basic length + travel

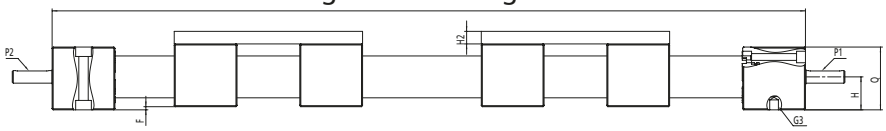

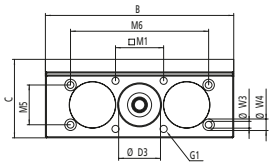

Total length – R

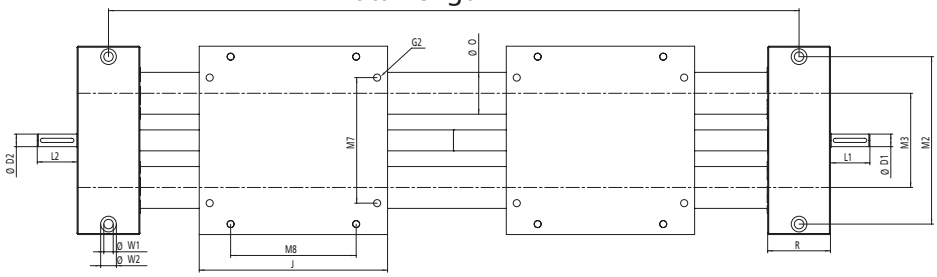

[mm]

M3	M5	M6	M7	M8	O	P 1	P 2	Q	R	W1	W2	W3	W4	Max. travel	Mass [kg]	
															Basic length	per 100 mm travel
70	35	92	80	114	30	2x2x20	– 2x2x20	52	50	6.5	10 / 26.5 deep	–	–	1640	6.3	0.4
90	38	132	120	160	40	4x4x32	– 4x4x32	60	60	9	15 / 9 deep	6.5	11 / 8,5 deep	2520	14.17	0.96

EPX-II 30/40 – Dimensions / ordering data

Order information:

- Please specify basic length and total travel when placing an order
- Corrosion-protected units available on request
- Second non driven carriage available on request
- Scale upon request
- Protect: version with bellows optional (IP 40)

Version ■ **Split screw**

Code No.	Type	Spindel	Basic length	B	C	D1	D2	D3	F	G1	G2	G3	H	H2	J	L1	L2	M1	M2
7983031 _ 1 _ A_ _ _ _	30	Tr 14x3	410	130	64	8	8	30 H8	2	M6 / 12 deep	M6	M6 / 9 deep	27	10	130	26	26	40x30	114.5
7984031 _ 1 _ A_ _ _ _	40	Tr 20x4	540	180	75	12	12	40 H8	3	M8 / 20 deep	M8	M8 / 8 deep	31.5	12	12	38	38	46	160

_ _ _ _ Total length = basic length + travel [mm]

A = standard
B = c/w angle drive on shaft end L1 (see page 19)

A = standard
B = c/w integrated spindle clamping

Total length = basic length + travel

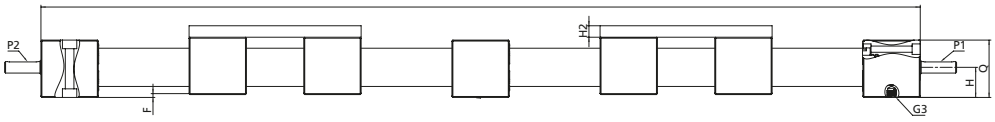

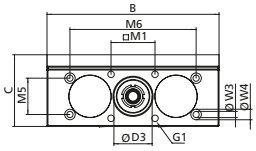

Total length – R

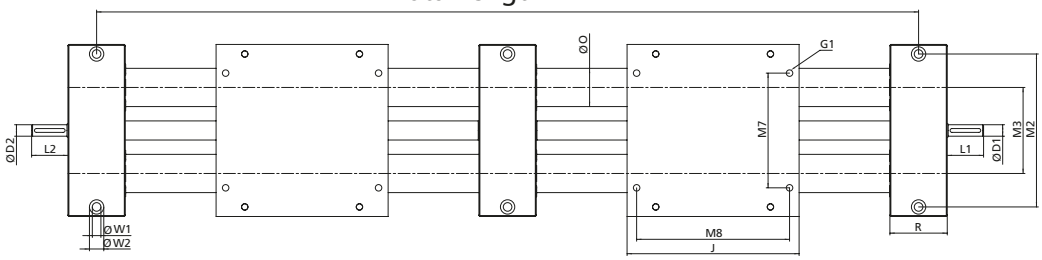

[mm]

M3	M5	M6	M7	M8	O	P 1	P 2	Q	R	W1	W2	W3	W4	Max. travel	Mass [kg]	
															Basic length	per 100 mm travel
70	35	92	80	114	30	2x2x20	2x2x20	52	50	6.5	10 / 26,5 deep	–	–	1295	7.2	0.4
90	38	132	120	160	40	4x4x32	4x4x32	60	60	9	15 / 9 deep	6.5	11 / 8.5 deep	2460	16.16	0.96

Handwheel

Diam. 140-200

Diam. 60-100

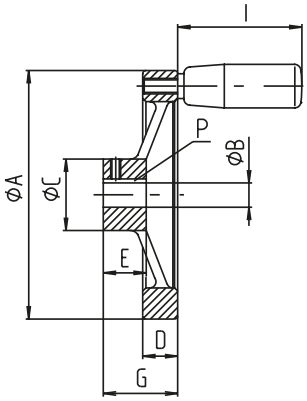

Material: Die-cast aluminium, black powder-coated

[mm]

Code No.	Type	ØA	B	C	D	E	G	P	I
90913	30	100	8	28	14	17	30	2x2	52
90915	40	100	12	28	14	17	30	4x4	52
90905	40	140	12	36	16.5	19.5	36	4x4	66

Chain wheel

- Other sizes on request

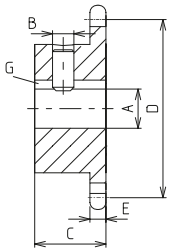

Material: Steel, 500 N/mm² min.

[mm]

Code No.	Type	A	B	C	D	E	G	No. of teeth	Size
91703	30	8	M6	18	41.1	4.5	2x2	10	1/2 x 3/16”
91704	40	12	M6	20	53	4.5	4x4	13	1/2 x 3/16”

HTD timing belt pulley

- Suitable for maintenance-free continuous operation

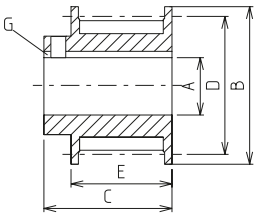

- Excellent accuracy and zero backlash during change of direction
- Clampable on feather key

Material: Steel

[mm]

Code No.	Type	A	B	C	D	E	G	Tensile force	Pitch
92103	30	8	23	20	19.09	14.5	2x2	220 N	5
92105	40	12	32	26	28.65	20.5	4x4	330 N	5

Bevel gear set

- Straight toothed
- Contact angle 20°
- Axial angle 90°
- Crowned tooth faces

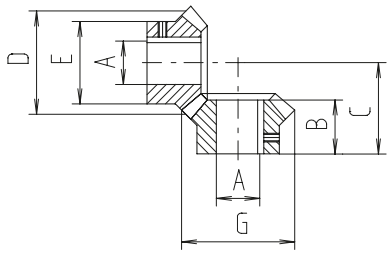

[mm]

Code No.	Type	A	B	C	D	E	G	No. of teeth	Module
91603	Set 30	8	15	24	24	18	26.11	16	1.5
91623	Single component 30								
91604	Set 40	12	19	31	32	26	35	16	2
91664	Single component 40								

Angle drive

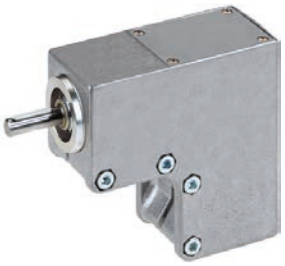

- If angle drives are fitted, the linear units are delivered exclusively with ball bearings

Delivery contents: Housing, bevel gear set and transmission unit

Material: housing-die-cast aluminium,
steel parts-zinc plated

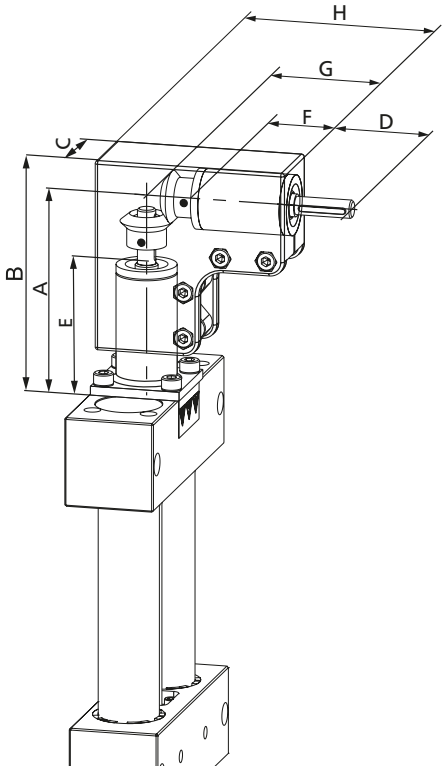

Power transmission of bevel gears

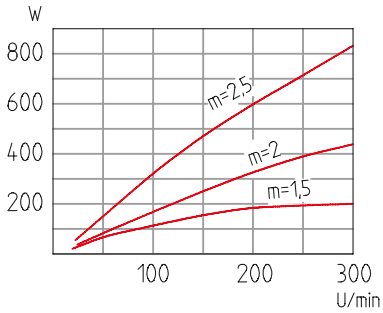

[mm]

Code No.	Type	A	B	C	D	E	F	G	H
Assembled to EP(X)									
p. 6-16	30	88	109	42	31	55	48	75	96
p. 6-16	40	129.7	157.7	54	39,5	83	65	100	128
Retrofit kit									
91556	30	88	109	42	31	55	48	75	96
91554	40	129.7	157.7	54	39.5	83	65	100	128

Selection table – motor adaptor/coupling

Type	Servo motor		Three-phase A.C. motor	
	RK-AC 118	RK-AC 240	90/120 W	180/250 W
EP(X)-II 30	949200	–	949623	–
	911430 0811	–	911940 0812	–
EP(X)-II 40	949201	949221	949614	94914
	911430 1112	911430 1214	911430 1212	911430 1214

Note: For further details on motor versions, please refer to the chapter "Motors and controls" in our main catalogue "Linear Technology".

Motor adaptor

- Simple assembly
- Exact fit due to centering shoulders

Material: Aluminium

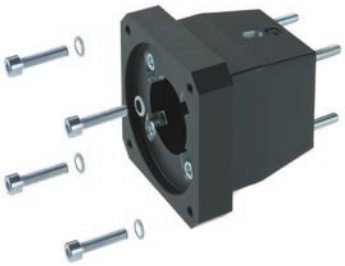

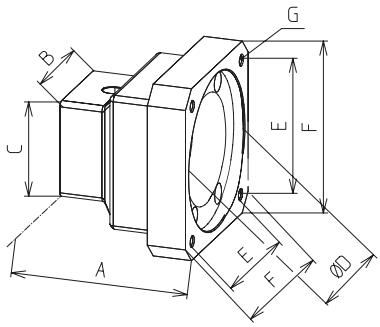

[mm]

Code No.	Type	A	B	C	D	E	F	G
949200	30	64	53.5	53.5	60	53	70	M5
949247	30	64	53.5	53.5	73	70	90	M6
949275	30	71	53.5	53.5	60	53	70	M5
949623	30	64	53.5	53.5	50	65	80	M5
949201	40	74	60	60	60	53	70	M5
949276	40	83	60	60	60	53	70	M5
949221	40	83	60	60	80	70,7	90	M6
949248	40	83	60	60	73	70	90	M6
949614	40	83	60	60	50	46	80	M5
94914	40	83	60	60	80	100	Ø120	Ø6.6

Motor adaptor for EHL

Linear unit connection

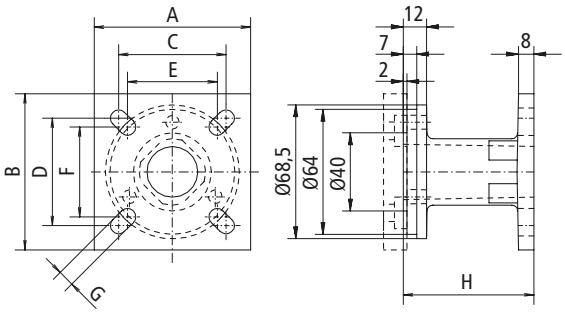

EHL connection

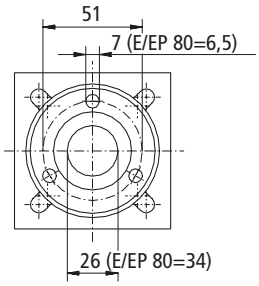

[mm]

Code No.	for linear unit	PinØ unit	A	B	C	D	E	F	G	H	L	Ø
92667	EP(X)-II 30	8	50	50	30	40	30	30	6	67	–	–
92668	EP(X)-II 40	12	60	60	46	46	36	36	7	67	–	–

Motor adaptor for linear units

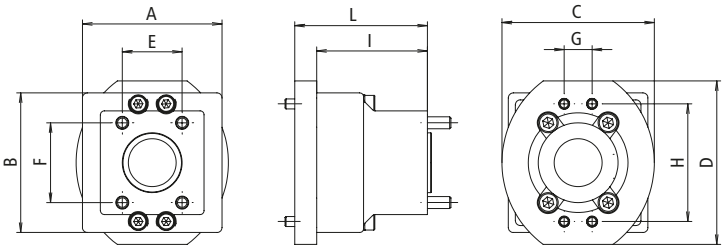

[mm]

Linear unit	LZ S Code No.	LZ P Code No.	Coupling Code No.	A	B	C	D	E	F	G	H	I	L
EP(X)-II 30	949710	949711	9109200810	70	70	76.4	82	30	40	14	59	55.5	66.5
EP(X)-II 40	949712	949713	9114301012	70	70	76.4	82	46	46	52.3	52.3	73.5	81.5

Coupling

- Small size
- Shaft connection without backlash
- Maintenance-free
- Easy plug-in assembly

Material: Hub – aluminium
Gear ring – polyurethane

To ensure the smooth running of the coupling, a clearance of **D+3 mm** is required.

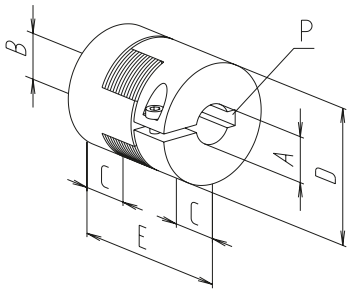

[mm]

Code No.	A	B	C	D	E	P	Torque [Nm] with feather key	Torque [Nm] without feather key
9109200895	8	9,5	10	20	30	2x2 / –	5	3
9114300811	8	11	11	30	35	2x2 / 4x4	12	6
9114300816	8	16	11	30	35	2x2 / 5x5	12	6
9114309512	9,5	12	11	30	35	– / 4x4	12	6
9114301112	11	12	11	30	35	4x4 / 4x4	12	6
9114301212	12	12	11	30	35	4x4 / 4x4	12	6
9114301214	12	14	11	30	35	4x4 / 5x5	12	6
9114301216	12	16	11	30	35	4x4 / 5x5	12	6
9119400812	08	12	25	40	65	2x2 / 4x4	17	10

Further information for adaption and drives see catalogue linear technology, chapter motors & controls.

Positioning indicator

- Permitted ambient temperature +80° C
- Figure height 6 mm
- Reading accuracy ± 0.1 mm
- If positioning indicators are fitted, the linear units are delivered exclusively with ball bearings

Material: Housing polyamide 6 Orange RAL 2004,
Steel parts corrosion-protected

Scope of delivery: Positioning indicator, clamping ring, shaft extension and fastenings

Note: "rising" and "falling" versions refer to the clockwise rotation of the drive shaft.

Installation position: horizontal

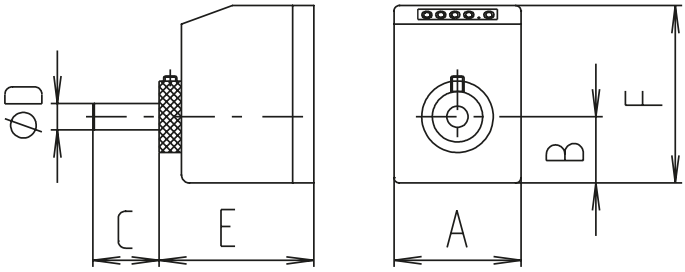

Installation position: vertical

[mm]

Type	Installation position	Code No.	Version	Code No.	Version*	A	B	C	D	E	F
30	Horizontal	91043	3 mm rising	91010	6 mm rising	48	25	18	8	59	67
30		91053	3 mm falling	91029	6 mm falling	48	25	18	8	59	67
30	Vertical	91063	3 mm rising	91020	6 mm rising	48	25	18	8	59	67
30		91073	3 mm falling	91019	6 mm falling	48	25	18	8	59	67
40	Horizontal	91004	4 mm rising	91030	8 mm rising	48	25	38	12	59	67
40		91014	4 mm falling	91039	8 mm falling	48	25	38	12	59	67
40	Vertical	91024	4 mm rising	91040	8 mm rising	48	25	38	12	59	67
40		91034	4 mm falling	91041	8 mm falling	48	25	38	12	59	67

* Version with double lead e.g. for installation on righthand/lefthand thread screws

Holder for inductive limit switch

- Limit switch can be moved and fixed axially

Type 30 – 40

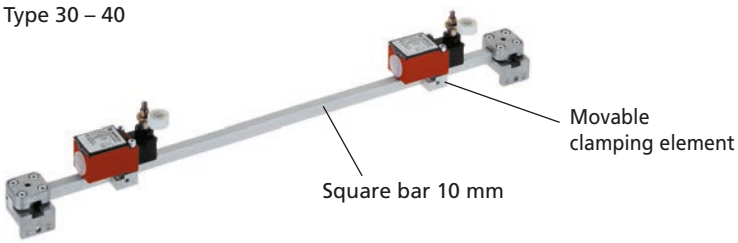

Type	30 – 40
Max. voltage	250 V AC
Max. switching current	6 A
Max. starting current	16 A
Lifetime	10 million switching cycles
Axis lever adjustment	locking at 10° increments
Protection rating	IP 65
Ambient temperature	-30°C to +80°C

Code No.	Type	Basic length	Version
92961_ _ _ _	30 – 40	245	with switch
92962_ _ _ _	30 – 40	245	without switch

Total length of linear unit

Mechanical limit switch

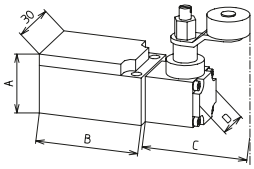

[mm]

Code No.	Type	Switching function	A	B	C	D
91905	30 – 40	NC contact / NO contact	26.5	45	45.5	21

- Limit switch can be moved and fixed axially

Type 30 – 40

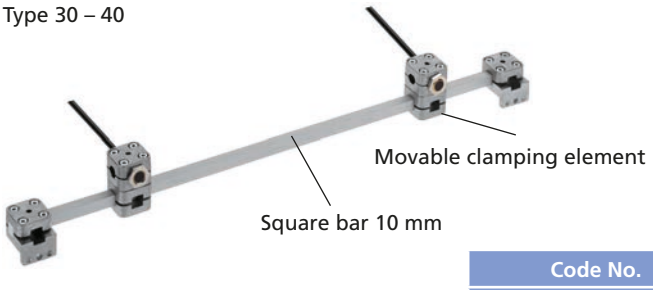

Type	30 – 40
Voltage	10 - 30 V DC
Max. switching current	200 mA
Operating distance	4 mm for steel
Protection rating	IP 67
Ambient temperature	-25°C to +70°C
Cable lengths	2m

Code No.	Type	Basic length	Version
92965_ _ _ _	30 – 40	125	without switch

Total length of linear unit

Inductive limit switch

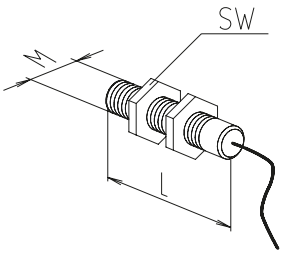

[mm]

Code No.	Type	Switching function	L	M	Wrench size (SW)
92825	30 – 40	Changeover	50	12x1	17

FAX reply form

✗ Yes, I would like to know more about RK linear technology, please:

☐ send me the Linear Technology catalogue

☐ send me details of your product range in PDF format on a CD-ROM

☐ contact me

Company: _____

Contact partner: _____

Department: _____

Address: _____

Tel. + Fax: _____

E-mail: _____

RK ROSE+KRIEGER
A Phoenix Mecano Company

Connecting and positioning systems

RK Rose+Krieger GmbH
Postfach 15 64
32375 Minden, Germany
Telephone: +49 (5) 71/35-0
Fax: +49 (5) 71/35-119
E-mail: info@rk-online.de
Internet: www.rk-rose-krieger.com

EN 1.000 Flyeralarm MAR 10 30 15 0003 10/2017 Printed in Germany