HIWIN®
Motion Control and System Technology

Press-fitting system

LAA Series
Servo Actuator

±0.005mm
High repeatability

100%
100%duty cycle

www.hiwinmikro.tw

Features

LAA Series
Servo Actuator

±0.005 mm
High repeatability
With HIWIN AC motor

3200 N
High thrust

100%
100%duty cycle

200 mm/s
High speed

PDL
Process Description Language

Easy-use process description language embedded.

1.Homing by directly searching index
2.Homing by touching hard stop
3.Use I/O interface to trigger motions.
4.Re-enable to resume an unfinished absolute positioning
5.Jog Motion by digital inputs
6.Jog Motion by analog inputs
7.Continuous Motion in force/torque mode

Modbus
Simple and robust commnunication interface

EtherCAT
High-speed network communications interface

Auto Tune
Auto Tune function

Servo loop gains can be easily set without complex procedures via Auto Tune.

0.006 sec
High acceleration responses

AC servo motor speed can change from -3000 to +3000 rpms in as little as 0.006 seconds.

Model Description

LAA1-11B-250-2C-1-2-A0-A-J-S

Type
1:Square tube

Motor
11:100W(INC)(STD)
12:100W(ABS)
41:400W(INC)(STD)
42:400W(ABS)

Brake
0：Without brake
B：With brake(STD)

Stroke
050：50mm
100：100mm
150：150mm
200：200mm
250：250mm

Lead
2：2.5mm (100W)
5：5mm (400W)

Accuracy
C：General
P：Precision

Reduction ratio
1：1(100W)
2：1.41(400W)

Standard special
S：Standard
E：Customized

From
J：J type

Back fixture
A:None(STD)
B:Hole of PIN
F:Flange
E:Customized

Front Flange
0:None
F:Flange(STD)
E:Customized

Piston rod
A:Outer thread (M10x1.25Px22L 100W)[STD]
B:Outer thread (M16x1.5Px30L 400W)[STD]
C:Hole of PIN
D:Inner thread (M10x1.25Px20L 100W)
E:Customized
F:Inner thread (M16X1.5PX30L 400W)

Limit
0:None
2:2pcs(STD)
Other quantity shall be assessed by HIWIN

Dimensions and Specifications(100W)

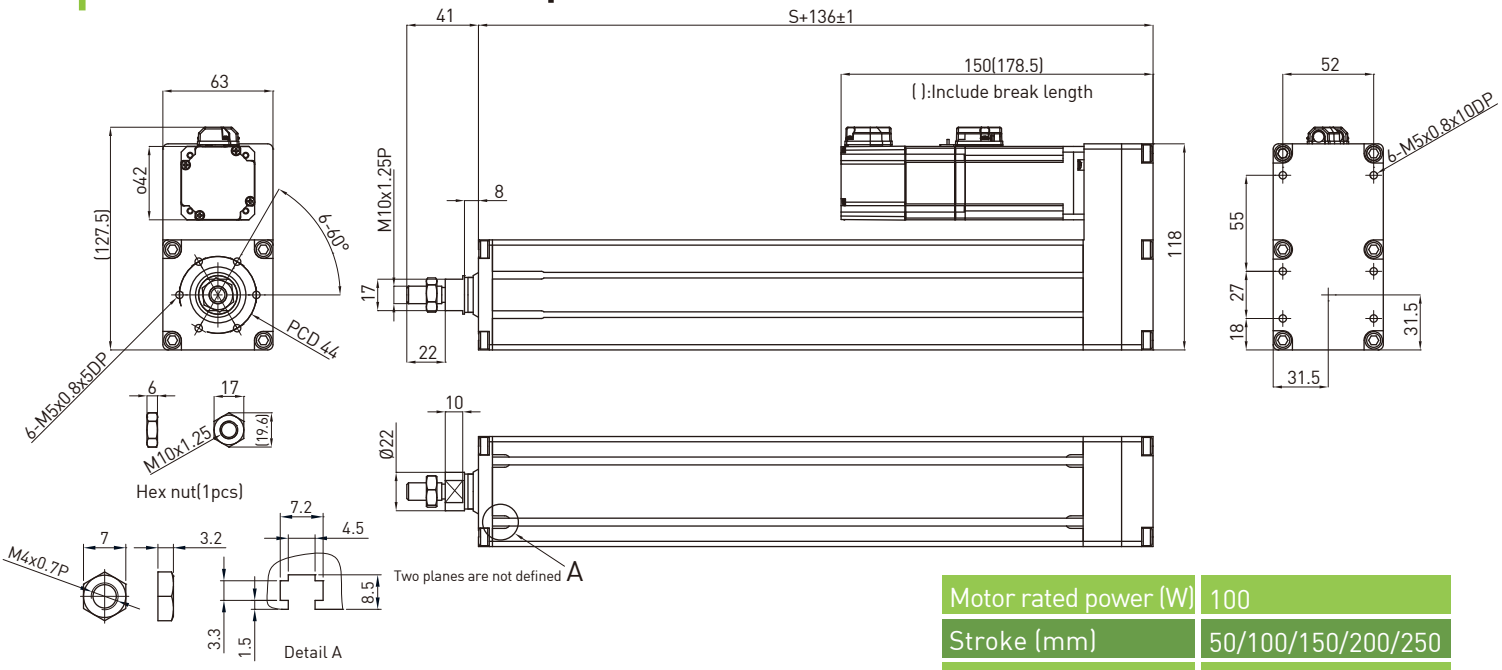

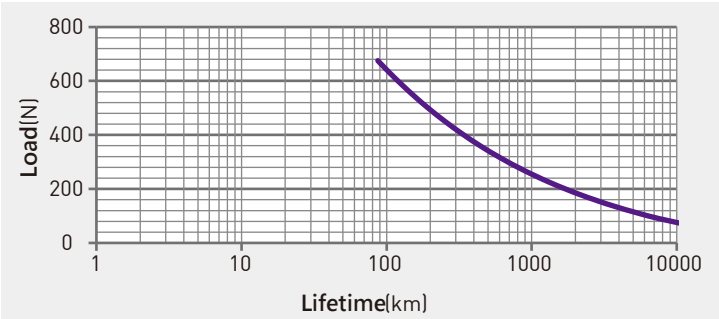

Motor rated power (W)	100
Stroke (mm)	50/100/150/200/250
Rated Force (N)	450
Max. speed (mm/s)	150(S≦200)
	130(200<S≦250)
Rated speed (mm/s)	100
Lead (mm)	2.5
Reduction ratio	1
Repeatability(mm)[1]	C:±0.02
	P:±0.005
Duty cycle (%)	100
IP	IP54

Note:1)The result of unidirectional repeatability is measured by HIWIN inspected method.
2)The theory lifetime of linear actuator as shown in figure.

■ Type of piston rod

Code C

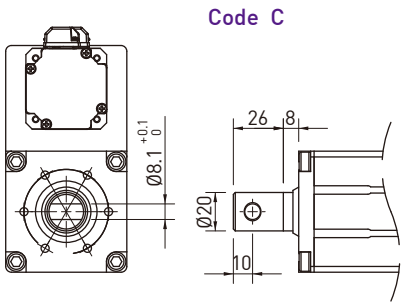

Code D

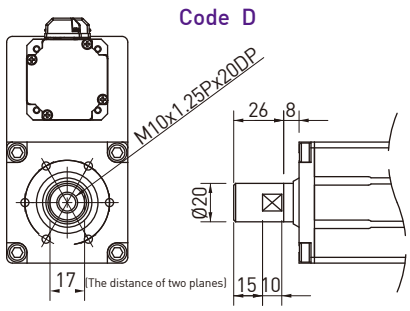

The direction of two planes are not defined.

■ Type of front flange

Code F

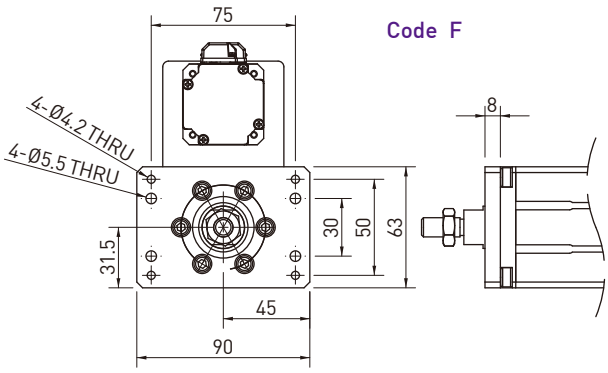

■ Type of Back fixture

Code B

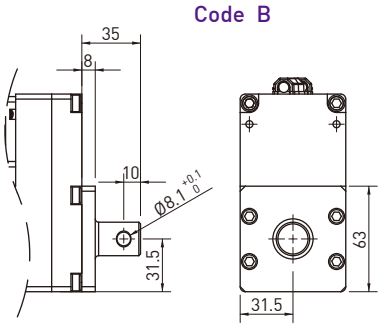

Code F

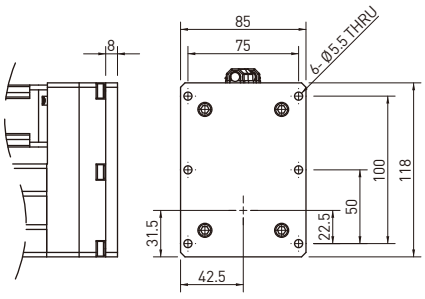

Dimensions and Specifications(400W)

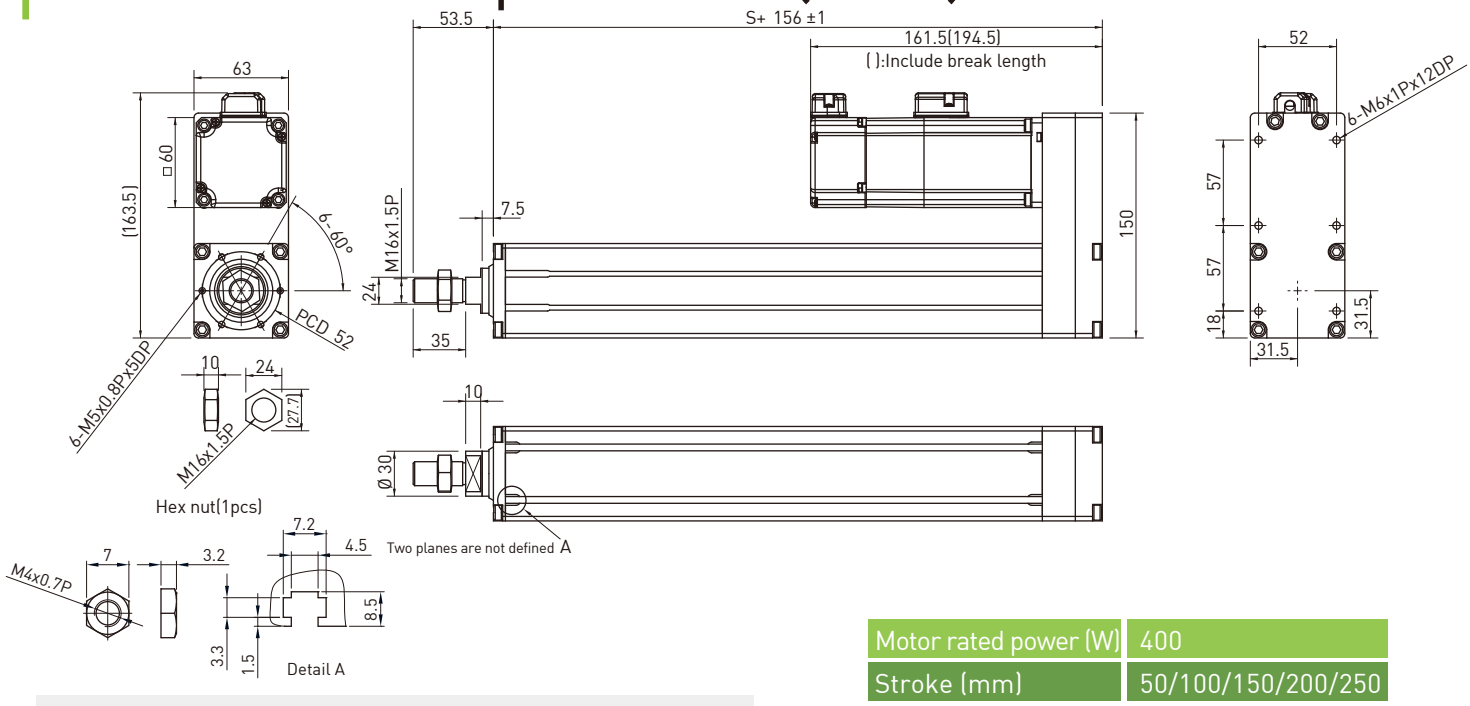

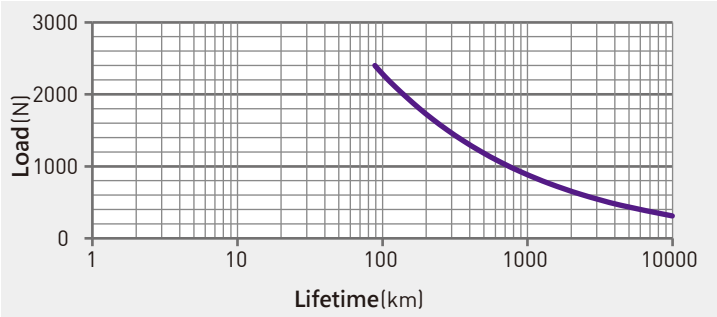

Note:1)The result of unidirectional repeatability is measured by HIWIN inspected method.
2)The theory lifetime of linear actuator as shown in figure.

Motor rated power (W)	400
Stroke (mm)	50/100/150/200/250
Rated Force (N)	1600
Max. speed (mm/s)	200
Rated speed (mm/s)	150
Lead (mm)	5
Reduction ratio	1.41
Repeatability(mm)[1]	C:±0.02
	P:±0.005
Duty cycle (%)	100
IP	IP54

■ Type of piston rod

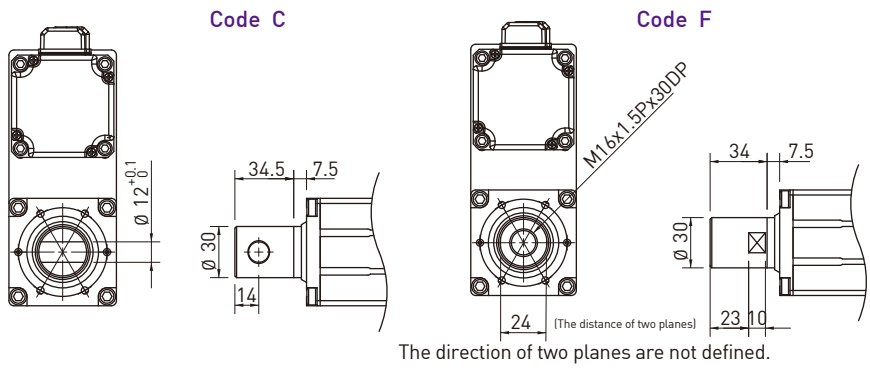

The direction of two planes are not defined.

■ Type of front flange

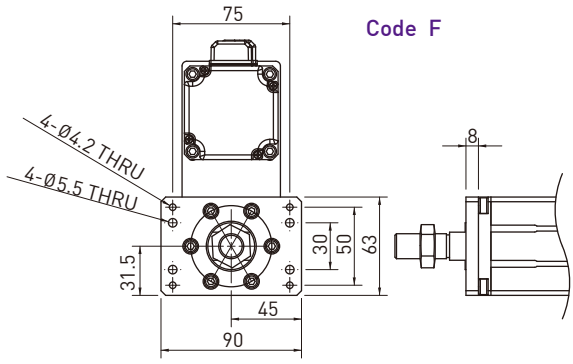

■ Type of Back fixture

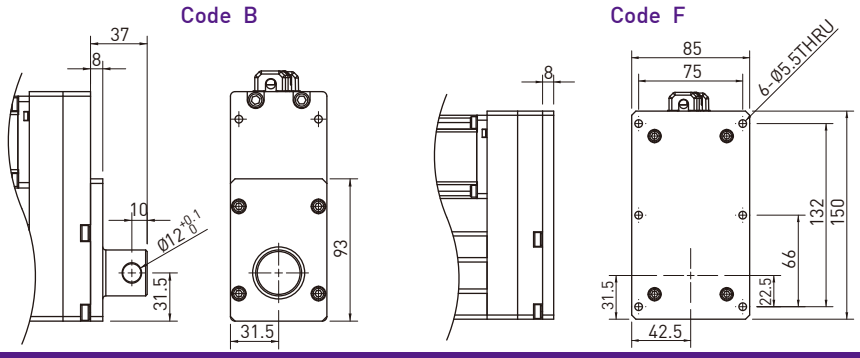

Interface Directions

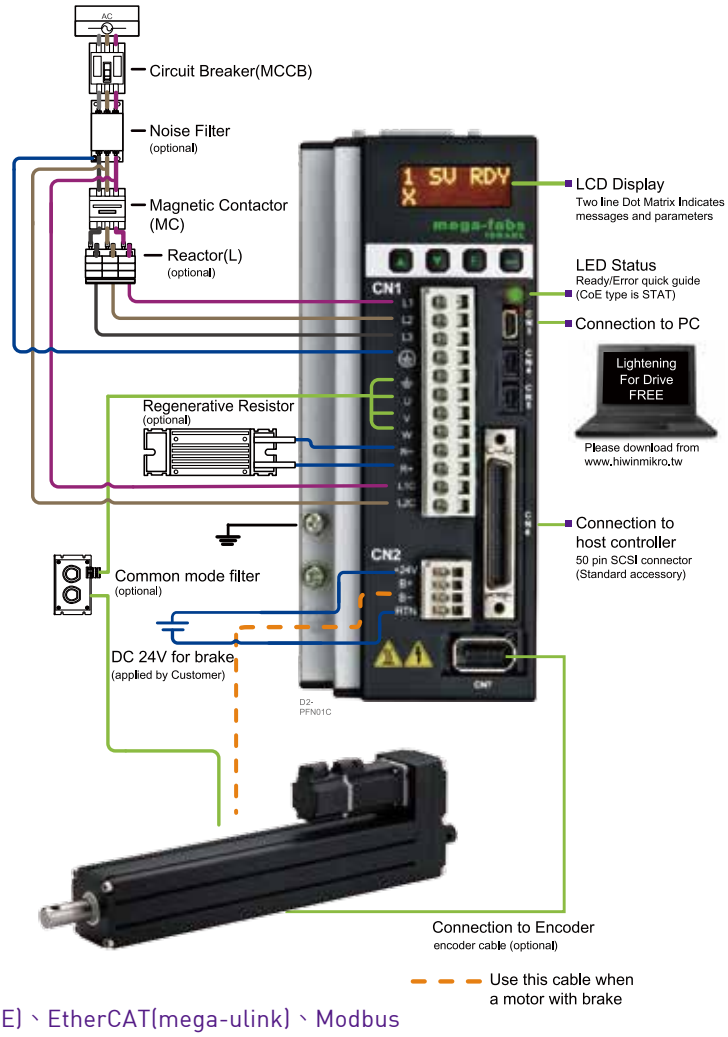

Note1: Interface:Pulse/Analog command、EtherCAT(CoE)、EtherCAT(mega-ulink)、Modbus
Note2: Voltage range:1/3 phase 220VAC

HIWIN®
Motion Control and System Technology

HIWIN MIKROSYSTEM CORP.
No.6, Jingke Central Rd.,
Taichung Precision Machinery Park,
Taichung 40852, Taiwan
Tel: +886-4-23550110
Fax: +886-4-23550123
www.hiwinmikro.tw
business@hiwinmikro.tw

Global Sales And Customer Service Site

HIWIN GmbH
OFFENBURG, GERMANY
www.hiwin.de
www.hiwin.eu
info@hiwin.de

HIWIN Schweiz GmbH
JONA, SWITZERLAND
www.hiwin.ch
info@hiwin.ch

HIWIN KOREA
SUWON · MASAN, KOREA
www.hiwin.kr
info@hiwin.kr

HIWIN JAPAN
KOBE · TOKYO · NAGOYA · NAGANO · TOHOKU · SHIZUOKA · HOKURIKU · HIROSHIMA · FUKUOKA · KUMAMOTO, JAPAN
www.hiwin.co.jp
info@hiwin.co.jp

HIWIN s.r.o.
BRNO, CZECH REPUBLIC
www.hiwin.cz
info@hiwin.cz

HIWIN CHINA
SUZHOU, CHINA
www.hiwin.cn
info@hiwin.cn

HIWIN USA
CHICAGO · SILICON VALLEY, U.S.A.
www.hiwin.com
info@hiwin.com

HIWIN SINGAPORE
SINGAPORE
www.hiwin.sg
info@hiwin.sg

Mega-Fabs Motion System, Ltd.
HAIFA, ISRAEL
www.mega-fabs.com
info@mega-fabs.com

HIWIN Srl
BRUGHERIO, ITALY
www.hiwin.it
info@hiwin.it

The specifications in this catalog are subject to change without notification.

©2018 FORM MA02DE02-1804
(PRINTED IN TAIWAN)